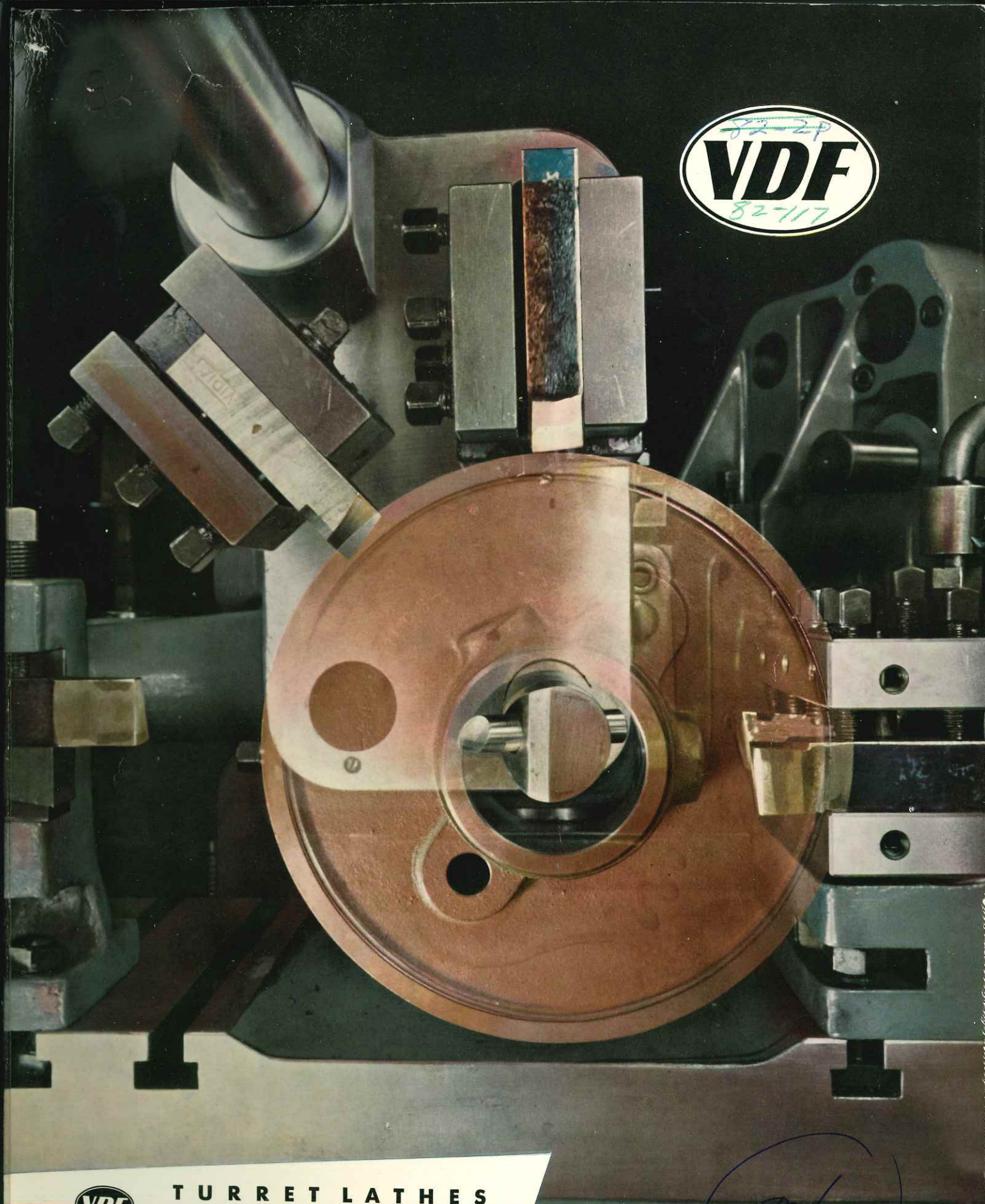

VDF

TURRET LATHES

RS 50 · RS 63 · RS 80 · RS 100

REPRESENTED IN U. S. A. by:
SEEWALD, INC.
1956 WOODBRIDGE AVE.
NEW BRUNSWICK, N. J.
TEL: CH 7-0264 CABLE: SEEWALD

VEREINIGTE DREHBANK-FABRIKEN

GEBR. BOEHRINGER G. M. B. H.
GÖPPINGEN

HEIDENREICH & HARBECK
HAMBURG

H. WOHLENBERG KOM.-GES.
HANNOVER

Reprinting permitted if origin quoted

Printed in Germany

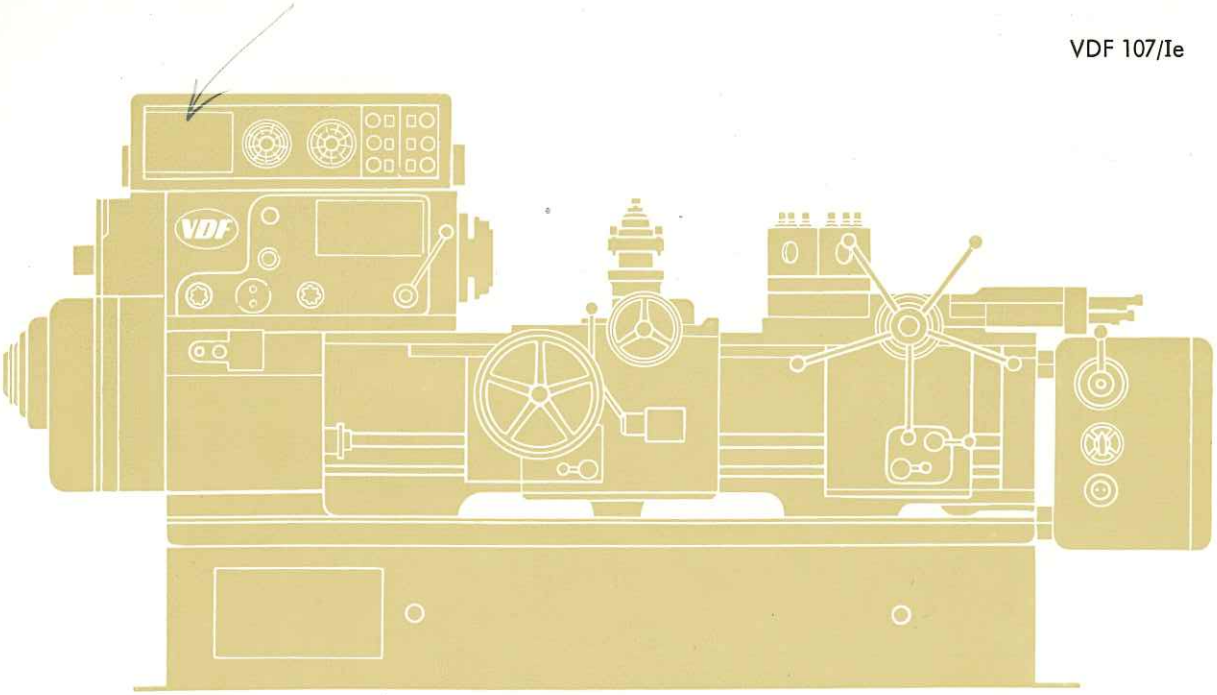

TURRET LATHES

RS 50 · RS 63 · RS 80 · RS 100

CONTENTS

	Page
Range of application of the turret lathe	2-3
Specification	4-5
Bed	6-7
Drive	8-9
Headstock with main gearing	10-13
Chucking equipment for chuck and bar work	14-15
Control panel	16-17
Feed drive and change gears for screw-cutting	18-21
4-way toolpost	22-23
Taper turning attachments	24-25
Turret	26-27
Coolant equipment	28-29
Assembly and test of the turret lathe	30-31
Tooling	32-37
Specimen operations	38-49
Our After-Sales Service	50-51
VDF manufacturing programme	52

This book deals with turret lathes and their best application. The adjoining photograph gives some idea of the vast variety of the workpieces which can be produced on these machines. Whilst we cannot within the scope of this publication do justice to all relevant information connected with turret lathe practice, we can make the following general statement:

The range of application of the turret lathe lies between that of a production lathe and the automatic. Whilst it is true that a centre lathe can be employed to advantage on the machining of batches of identical workpieces, producing accurate work at favourable cutting speeds and without time-wasting second operations, it is a fact that generally only one cut is taken and one chip removed. The turret lathe opens up quite different possibilities: by using several tools simultaneously on the workpiece, it is possible to perform longitudinal turning and facing, external and internal machining at the same time. The short production times obtainable have in many factories made the turret lathe operator the most over-worked member of the shop. It has been calculated that an efficient turret lathe operator performs between six thousand and ten thousand manipulations in the course of an eight-hour day. It is therefore obvious that with this kind of over-exertion the incidence of rejects rises and the operating economy of the machine consequently drops. In order to remedy this fundamental drawback, all VDF turret lathes incorporate electric automatic cycle control for speeds, direction of spindle rotation, and feeds. The auto cycle can be interrupted by hand at any time and continued individually after operating a pre-selector mechanism. The operator normally merely attends to the carriage and turret slide controls to start the operating cycle governed by a perforated card previously prepared by the Works planning department. About 30% of the hand operations required on a mechanically-controlled machine are thus eliminated. Handling times are considerably reduced, and the operator can concentrate on the work in progress without premature fatigue.

It used to be common practice to employ turret lathes for first operation turning only, and finish machine close tolerance work, journals etc. on other machine tools. Today turret lathes permit roughing and finishing in one setting, provided that the machining allowances are normal, and the workpiece is not liable to over-heat through metal removal. An additional grinding operation is then in many cases obviated. The VDF turret lathe is today so far developed that it can be considered a sound investment everywhere.

See for yourself:

All important details are given on the following pages.

CAPACITY

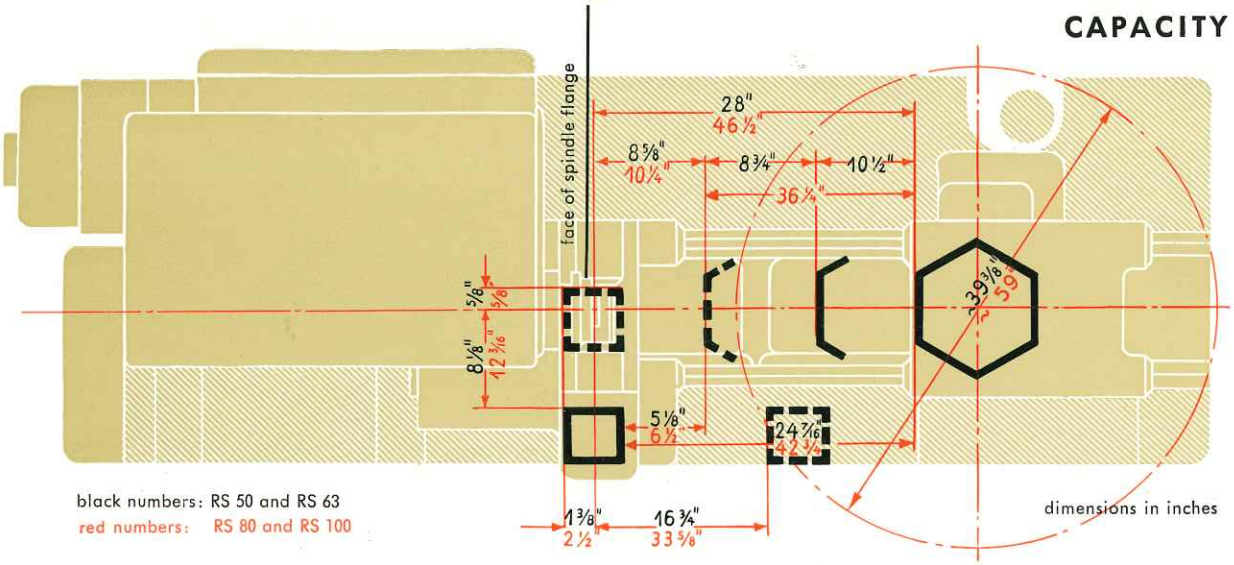

STANDARD EQUIPMENT

All VDF turret lathes are equipped with automatic cycle control and preselector control for spindle speeds, direction of spindle rotation and feeds.

TYPE I for chuck work:

Short cross slide with 4-way toolpost on fixed base.

TYPE II for bar work:

Extended cross slide with 4-way toolpost on fixed base and rear parting-off toolpost.

TYPE III for chuck and bar work:

Extended cross slide with 4-way toolpost on fixed base and rear parting-off toolpost.

Additional equipment comprises guards, spanners, crank handles, electrical switchgear and two operator's handbooks per machine.

EXTRA EQUIPMENT

The following equipment is available for adapting the machine to individual requirements. We shall be pleased to meet any special applications.

Coolant equipment for carriage and turret slide

Screw-cutting mechanism (leadscrew and change gears)

Chasing attachment (for RS 80 and RS 100 only)

Toolpost with longitudinal adjustment on carriage

Carriage with top slide on swivel base***

Quick-change toolpost on fixed base

Quick-change toolpost with top slide on swivel base***

Dial gauge stop for cross traverse

Extended cross slide with T-slots*

Rear parting-off toolpost for extended cross slide*

Taper turning attachment on carriage

Chuck guard

Hand-operated bar feed**

Power-operated bar feed**

Short cross slide****

Spherical turning attachment (for RS 80 and RS 100 only)***

Chucking equipment

Tooling

* Standard equipment on bar machines
** Available on bar machines only
*** With special cross slide
**** Standard equipment on chucking machines

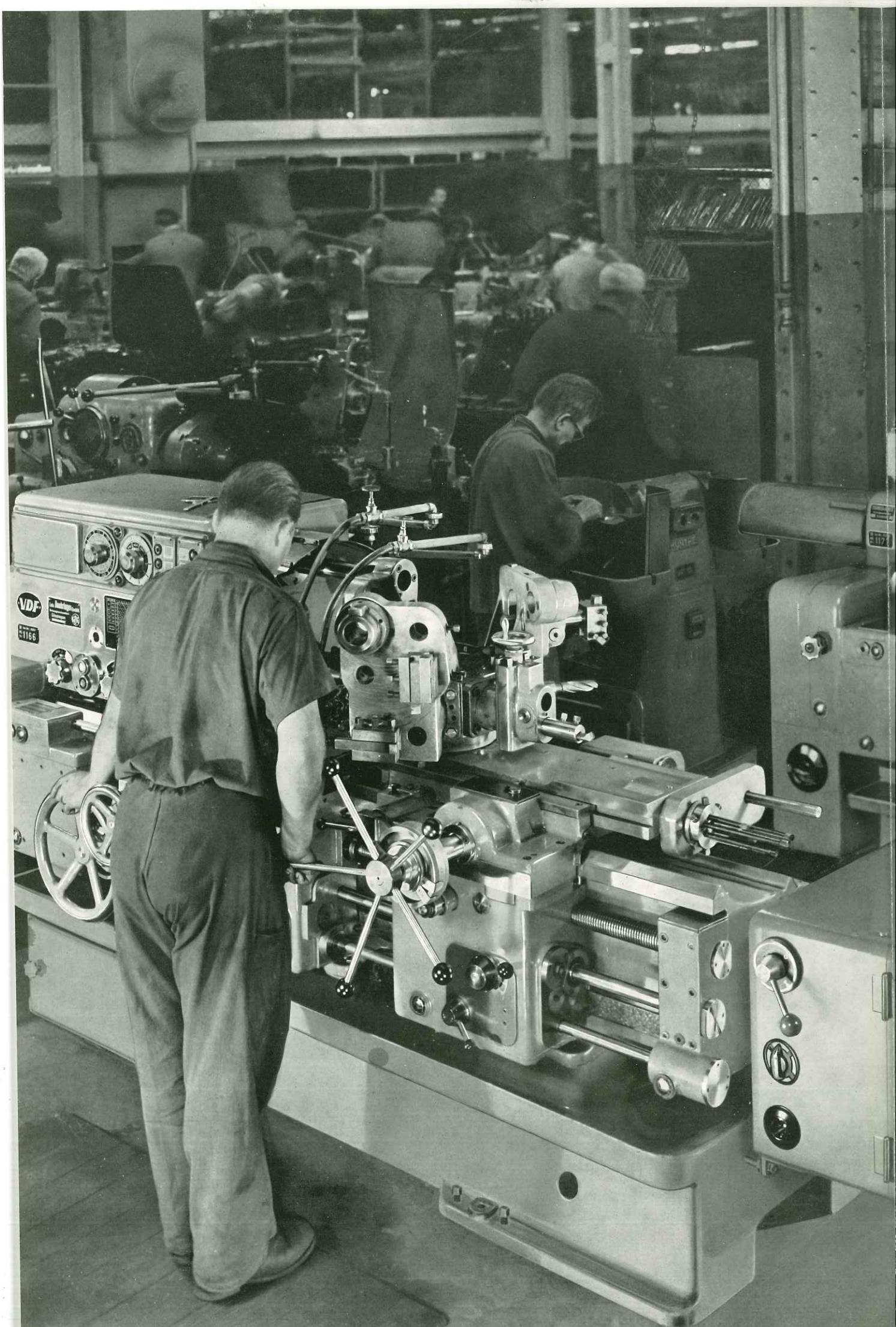
VDF

VDF - TURRET LATHES

(Model RS 63 on right and Model RS 80 on left) are serving industry throughout the world every day

SPECIFICATIONS FOR VDF TURRET LATHES

VDF Conforming to DIN 8610 Limits

VDF TURRET LATHES MODEL		RS 50 · RS 63		RS 80 · RS 100	
CAPACITY					
Turning diameter					
over carriage wings	mm in.	400	15 3/4	500	19 5/8
over short cross slide, without cover	mm in.	315	12 7/16	400	15 3/4
over short cross slide, with cover	mm in.	245	9 5/8	335	13 3/16
over extended cross slide, in recess	mm in.	220	8 5/8	280	11
Swing over bed	mm in.	450	17 3/4	560	22 1/16
Spindle speeds					
Number of speeds		15		15	
Spindle speed range, flange-mounted motor drive	r.p.m.	18…2240		14…1800	
i. e. 9 speeds through gears	r.p.m.	18…710		14…560	
6 speeds through belts	r.p.m.	224…2240		180…1800	
Spindle speed range, foot-mounted motor drive	r.p.m.	14…1800		14…1800	
i. e. 9 speeds through gears	r.p.m.	14…560		14…560	
6 speeds through belts	r.p.m.	180…1800		180…1800	
Feeds					
Number of longitudinal and transverse feeds to the carriage as well as longitudinal feeds to the turret slide		29 each		26 each	
Range of feeds, per revolution	mm	0,016…10,0		0,016…5,0	
	in.	0.00063…0.3937		0.00063…0.1969	
Rapid traverse					
cross traverse of carriage,	m.p.m. f.p.m.	1,85	6	1,85	6
longitudinal traverse of carriage and turret slide,	m.p.m. f.p.m.	—		4,0	13
Screw-cutting (without extra change gears)					
Number of metric leads		32		42	
Range	mm	0,2…7		0,2…14	
Number of inch leads		42		54	
Range	t.p.i.	140…4		140…2	
DIMENSIONS					
Length of bed	mm in.	2150	84 5/8	2800	110 1/4
Head width of bed	mm in.	315	12 3/8	400	15 3/4
Headstock spindle					
with spindle nose to DIN 55 022	size	6		8	11
Diameter of spindle bore	mm in.	52 2.047	65 2.559	82 3.228	103 4.055
Maximum round bar stock admitted	mm in.	50 1.969	63 2.48	80 3.15	100 3.937
Turret					
Maximum distance between spindle flange and face of turret	mm in.	710	28	1180	46 1/2
Maximum traverse of turret slide	mm in.	224	8 7/8	920	36 1/4
Diameter across faces of turret	mm in.	250	9 7/8	315	12 3/8
Diameter of tool holes	mm in.	40	1.575	65	2.559
Pitch of leadscrew (DIN 113)	mm	6		12	
CHUCKS					
Hand-operated					
Three-jaw chuck, diameter conforming to DIN 6350	mm in.	200	7 7/8	250	9 7/8
Collet chuck, capacity for round bar stock, diameter	mm	12…50	20…63	22…80	
	in.	1/2 …2	3/4…2 1/2	7/8…3 1/8	
capacity for square bar stock, A/F	mm	12…35	20…42	22…55	on application
	in.	1/2 …1 3/8	3/4…1 5/8	7/8…2 5/32	
capacity for hexagon bar stock, A/F	mm	14…41	19…50	22…65	
	in.	9/16…1 5/8	3/4…2	7/8…2 1/2	
Power-operated					
Three-jaw chuck with rotating compressed air cylinder Diameter conforming to DIN 6350	mm in.	200	7 7/8	250 and 315	9 7/8 and 12 3/8
Three-jaw chuck, electrically-operated Diameter conforming to DIN 6350	mm in.	200	7 7/8	250 and 315	9 7/8 and 12 3/8
ELECTRICAL EQUIPMENT					
Rating of main motor	kW H.P.	7,5	10	10	13
Rating of rapid traverse motor	kW H.P.	0,55	3/4	0,55	3/4
Operating current for automatic cycle control	Volts	24		24	
WEIGHTS					
(Approx. weight of normal machine without main motor)					
Machine arranged for chuck work	kg lbs.	2900	6400	4100	9040
Machine arranged for bar work	kg lbs.	3000	6620	4200	9260
Machine arranged for chuck and bar work	kg lbs.	3000	6620	4200	9260
Gross weight of machine with seaworthy packing	kg lbs.	3600	7950	5000	11000
Shipping volume of seaworthy case	m³ cu.ft.	7	247	10,8	381
FLOOR SPACE					
Machine arranged for chuck work	mm in.	3315 x 1460	130 1/2 x 57 1/2	3650 x 1550	143 3/4 x 61
Machine arranged for bar work	mm in.	7000 x 1500	275 5/8 x 59	6650 x 1550	261 7/8 x 61

We reserve the right to modify design, dimensions and weights.

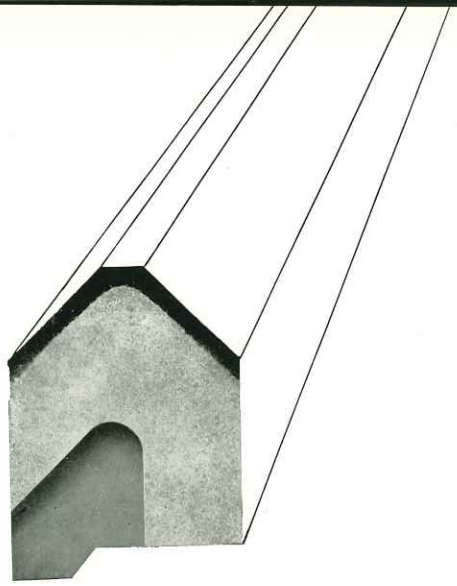

Owing to the number of cutting tools simultaneously in action, the bed and base of a turret lathe often have to absorb considerable cutting pressures. In addition, the amount of chips and swarf produced is very much greater than on normal centre lathes. Operations taking place in rapid succession call for many movements of the carriage and turret slide.

The beds on VDF turret lathes are therefore wide and sturdy. The two Vee ways extending the full length of the bed are hardened and ground. The grinding finish on the bedway cross section clearly shows the depth effect of hardening. The rear bedway is slightly lower than the front one to enable the carriage wing to pass under the headstock. This feature makes it possible in many cases on turret work to clamp the tools with less overhang than normal. Wide openings between the bed shears permit unobstructed chip disposal. The upper part of the base is arranged for collecting the chips which can easily be removed to the rear. The lower part of the base acts as coolant reservoir. All equipment for the automatic cycle control is housed in the control compartment on top of the headstock. All other electrical control gear is accommodated in a switchgear cabinet, conveniently arranged and easily accessible.

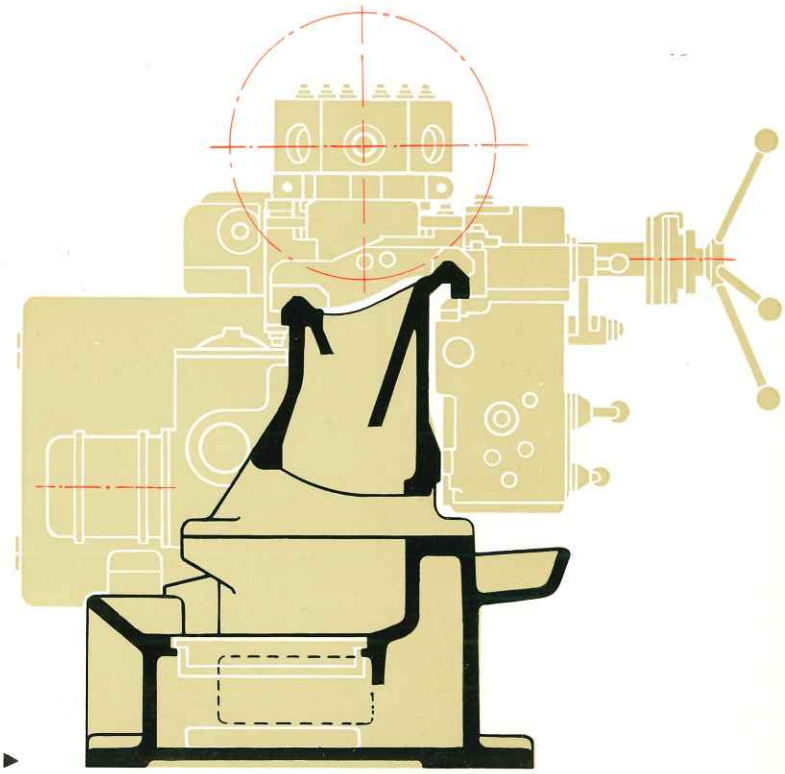

◀ *GRINDING THE HARDENED BEDWAYS*

CROSS SECTION OF THE BED ON A VDF TURRET LATHE RS 63 ▶

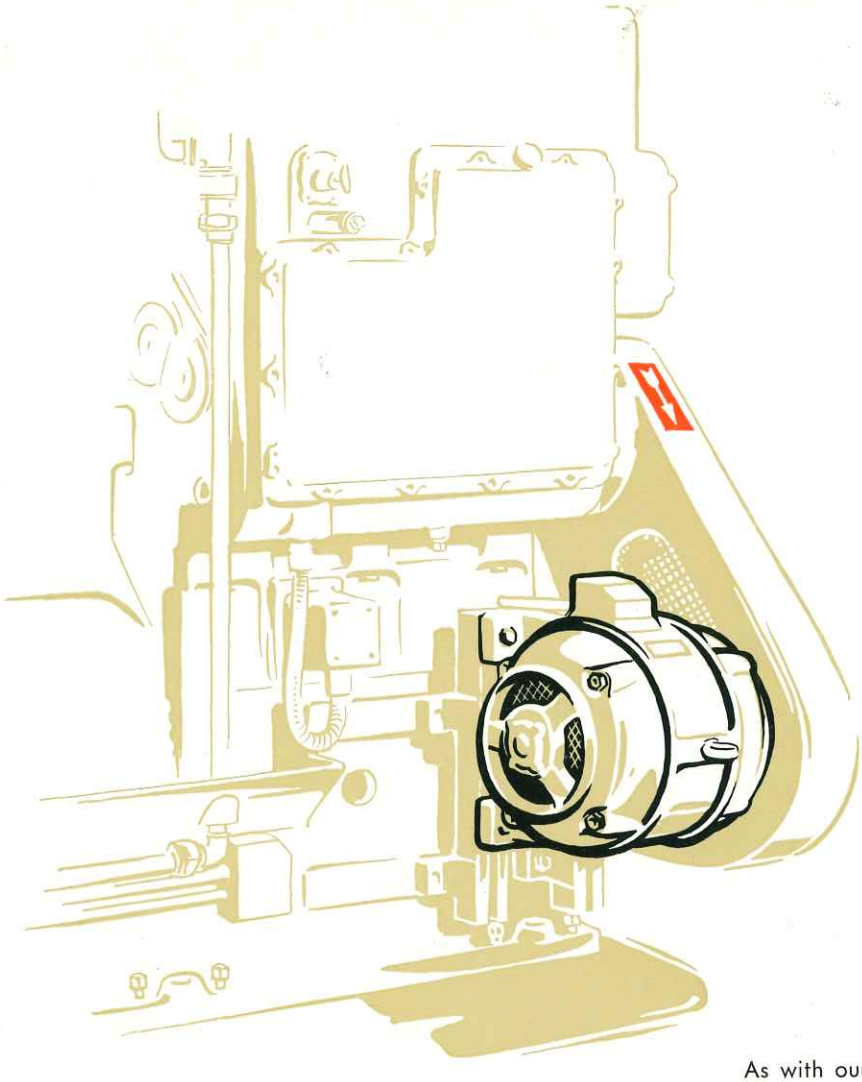

As with our centre lathes, we also endeavour with our turret lathes to meet customers' wishes in respect of the drive as far as possible. Two possibilities are available:

Firstly, drive from a flange-mounted motor, as generally preferred nowadays. The motor blends with the lines of the headstock. It is dynamically balanced and ensures smooth, vibrationless running of the machine.

Secondly, drive from a foot-mounted motor on the rear of the cabinet leg below the headstock. A vertical T-slotted baseplate, two Vee groove pulleys, high-duty belts and a belt guard are delivered with the machine.

FLANGE-MOUNTED MOTOR ON A VDF TURRET LATHE MODEL RS 50 ▶

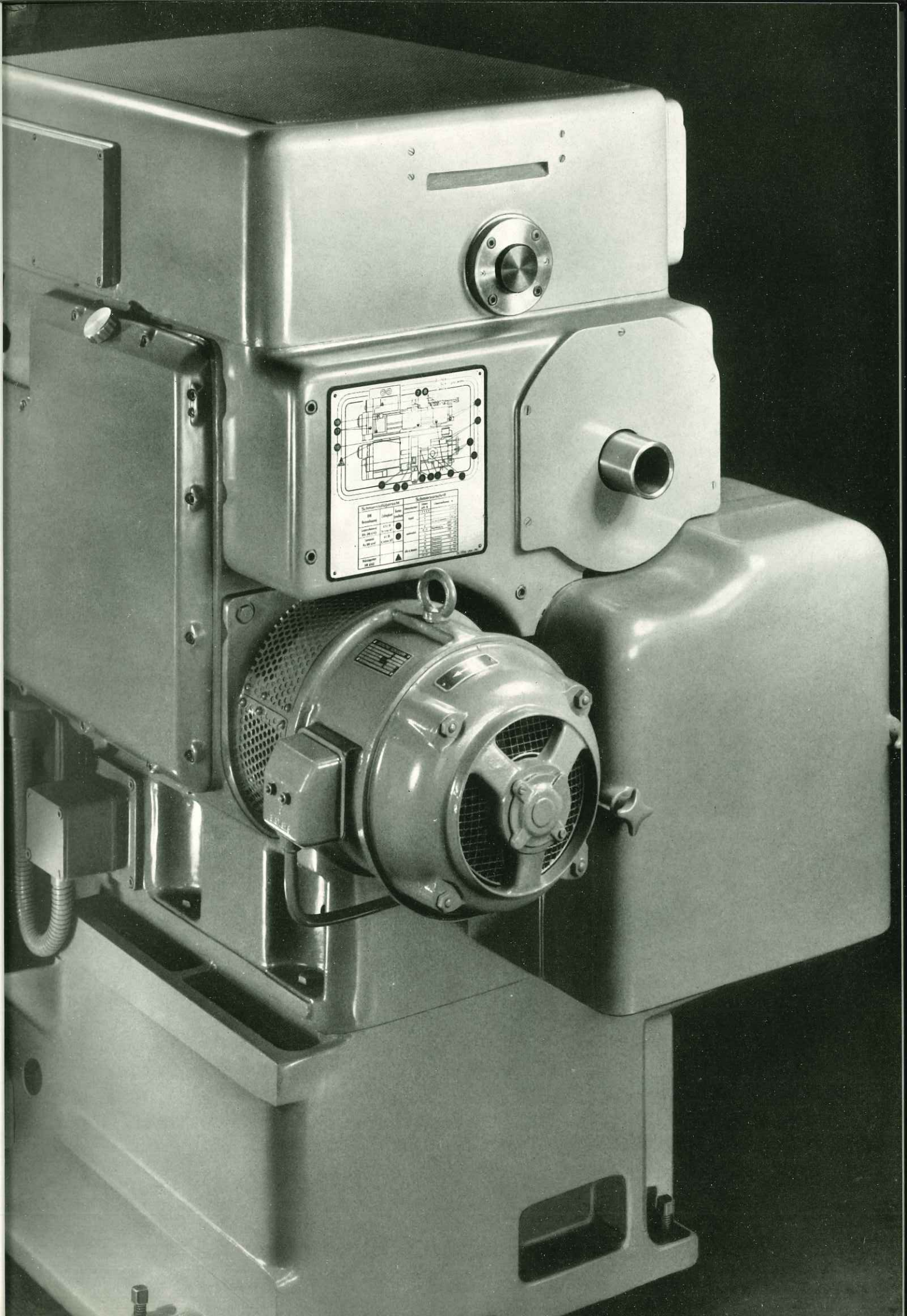

▲

FRONT VIEW OF HEADSTOCK WITH CONTROL PANEL MODEL RS 80

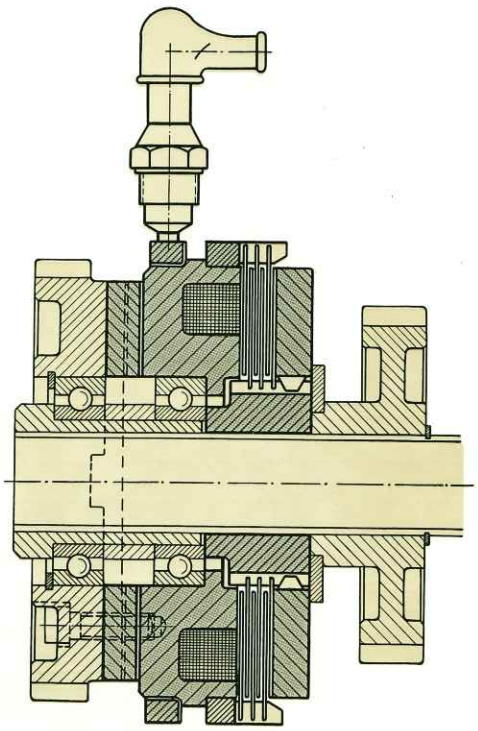

As can be seen above, the headstock has only a few controls, as everything is electrically controlled through magnetic clutches. Electric controls can today claim to be as dependable as mechanical ones, and in many cases ensure smoother engagement, more likely to protect the gearing. The one remaining lever is used for changing from geared to belt spindle drive for the upper speed range. The two knobs engage the fine and coarse feeds as well as the basic screw-cutting leads. The feed plate shown on page 20 gives details on the combinations possible.

◀ *SECTION THROUGH AN ELECTRO-MAGNETIC MULTIPLE DISC CLUTCH*

Spindle nose

with short taper and bayonet plate to DIN 55022. Chucks and faceplates are accurately centred, securely seated, and can be rapidly and easily changed.

Front spindle bearing

adjustable taper roller type. This bearing – as well as all others – is force-feed lubricated.

Main drive gear

mounted on spindle and carried in two deep-groove ball bearings.

Control sleeve

for locking the main drive gear on the spindle during gear drive at the lower spindle speed range. The sleeve is disengaged by the lever on the headstock when the drive is through belt.

Centre spindle bearing

likewise adjustable taper roller type.

Gear

for the feed drive during screw-cutting.
The feed motion is not derived from the spindle during longitudinal turning and facing.

Rear spindle bearing

A cylindrical ball bearing acts as rear support bearing and absorbs in particular the belt pull. The disc deep-groove ball bearings ensuring the axial position of the spindle are pre-loaded by six springs in view of the high spindle speeds.

Pulley

for flat "Siegling" belt outside the headstock for transmitting the spindle speeds in the upper range. As the spindle is connected with the gearing through the belt only, a particularly high finish can be obtained on fine turning.

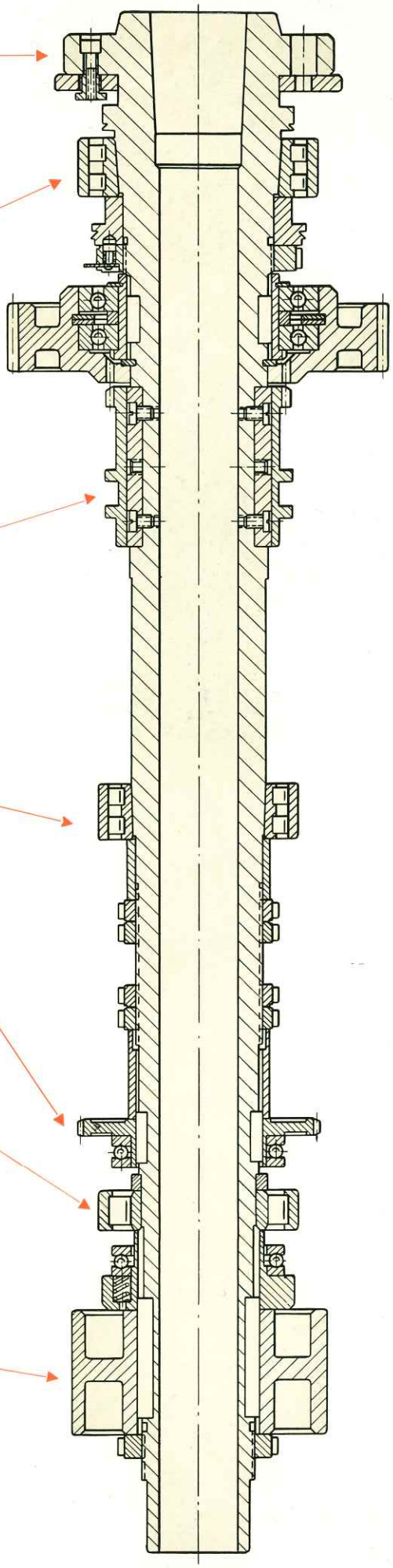

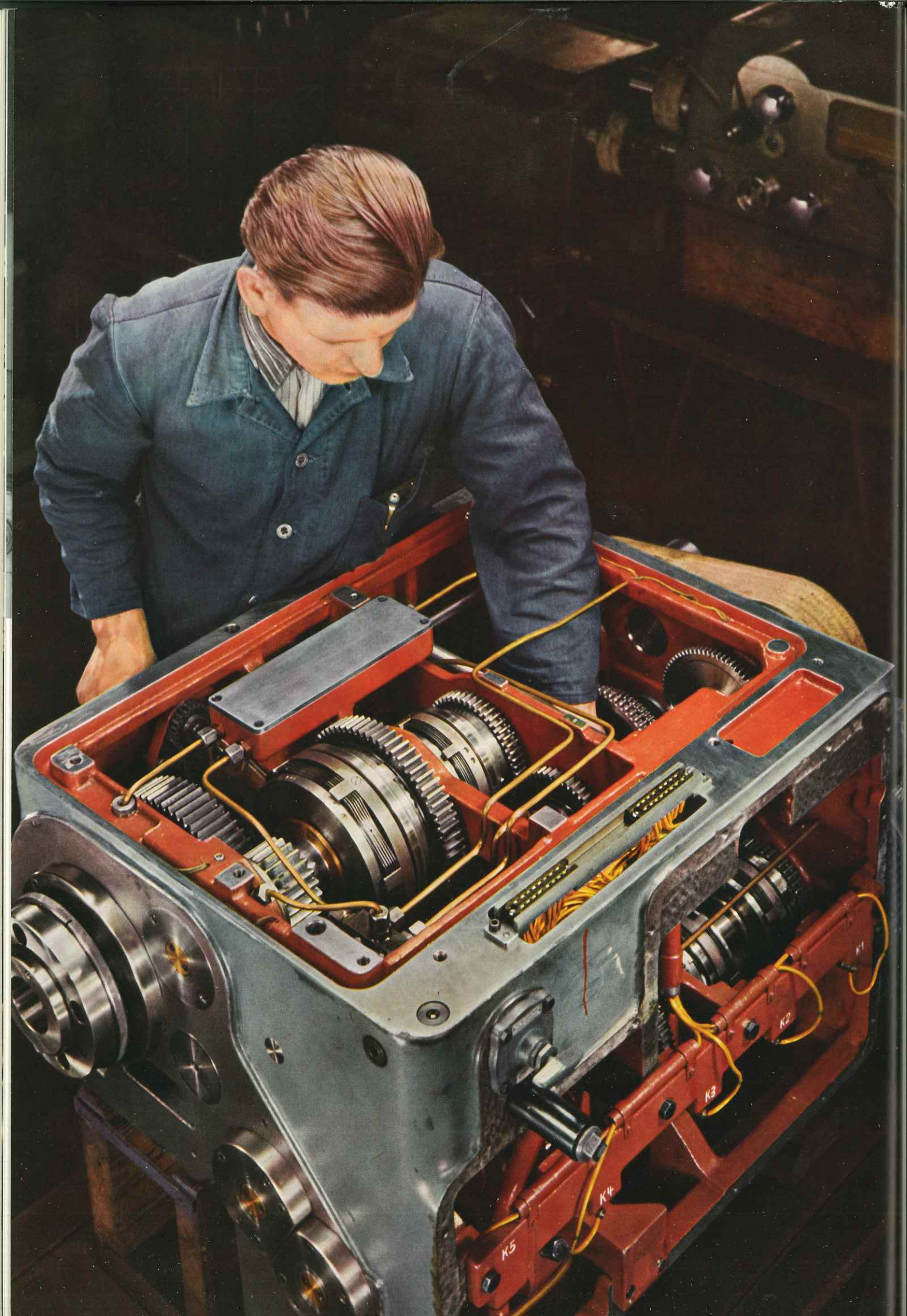
K1
K2
K3
K4
K5

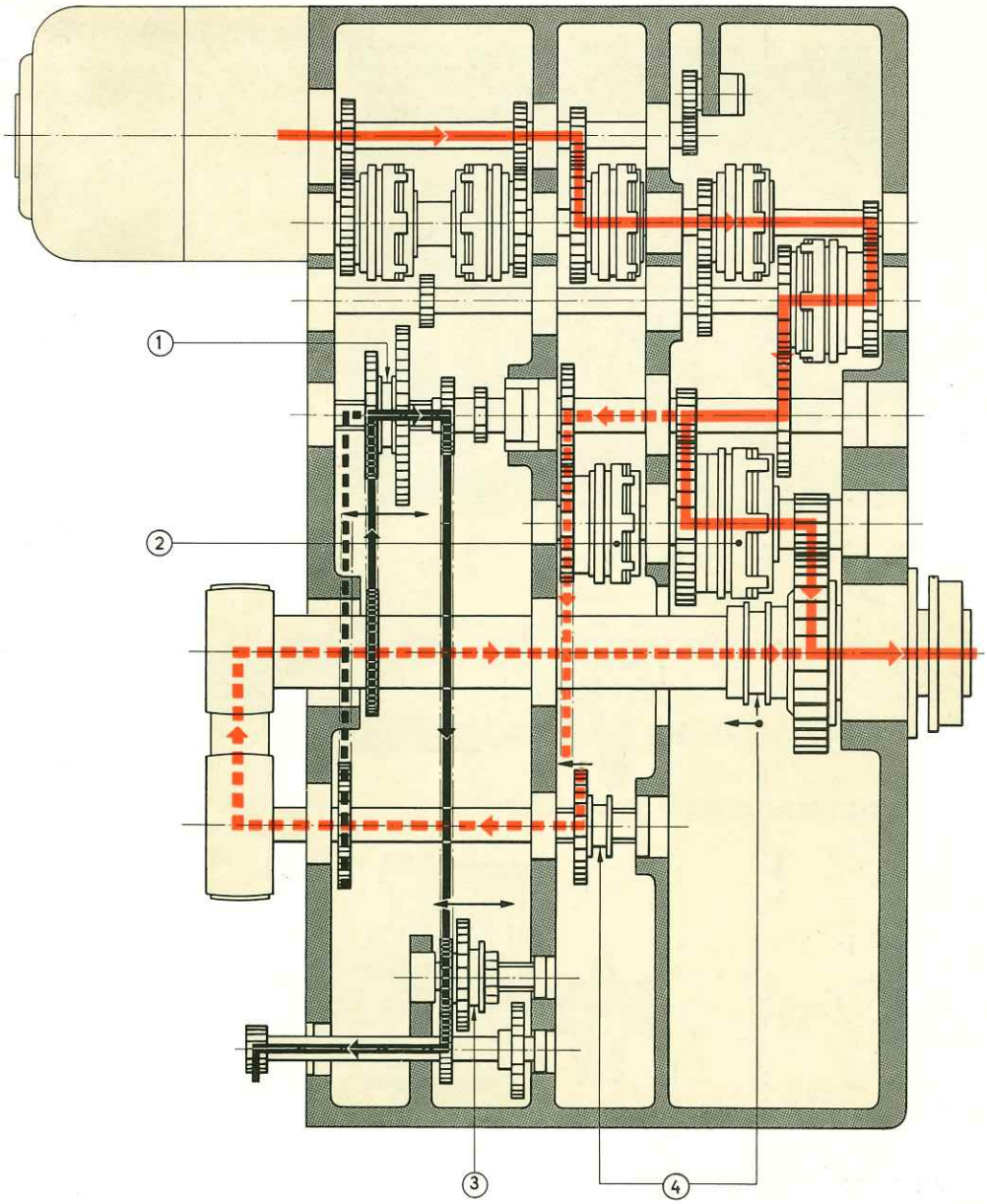

Spindle drive through gears

Spindle drive through belt

Feed drive for screw-cutting

Normal feed drive

① Gear train: normal feed - coarse feed

② These clutches act as brake when the machine is disengaged

③ Gear train: normal feed – fine feed

④ Selector control: spindle drive through gears – spindle drive through belt

◀ *COMPLETING THE ASSEMBLY OF THE HEADSTOCK*

The adjoining photograph and above diagram are more eloquent than words. We therefore confine ourselves to the following brief remarks:

The overall spindle speed ration is 1 : 125. The gear-driven and belt-driven speeds are arranged in geometrical progression 1.6. The overlapping of the two speed ranges provides eight spindle speeds in geometrical progression in the medium range. The reverse speeds are equal to the forward speeds as reversing is simply effected by changing the motor poles. A gear pump in the headstock distributes the oil through a piping system to the various lubricating points.

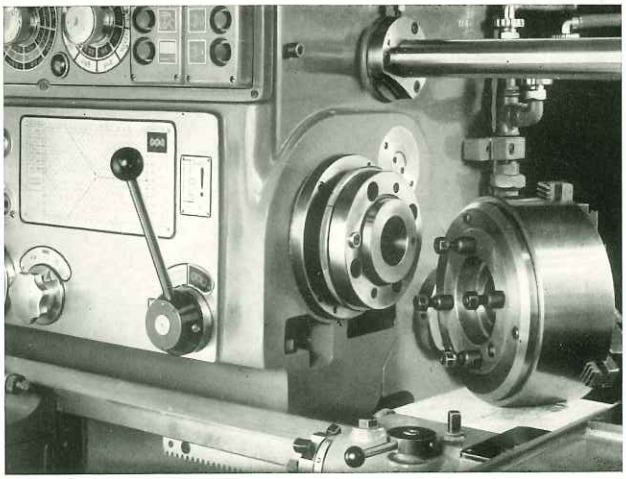

SPINDLE NOSE TO DIN 55022

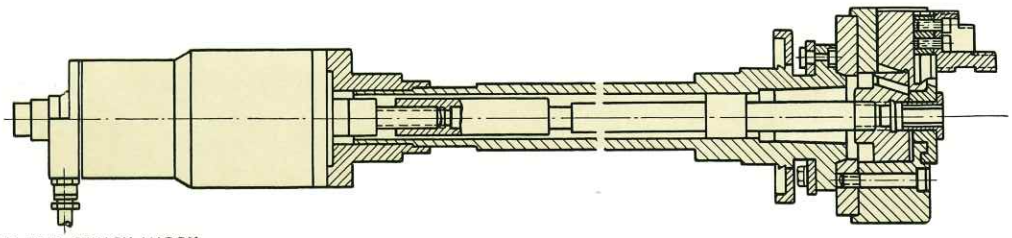

ELECTRICALLY-OPERATED CHUCK FOR CHUCK WORK

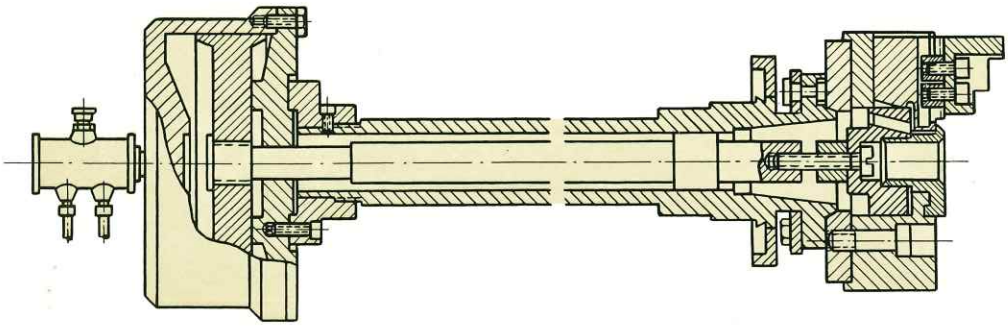

AIR CHUCK FOR CHUCK WORK

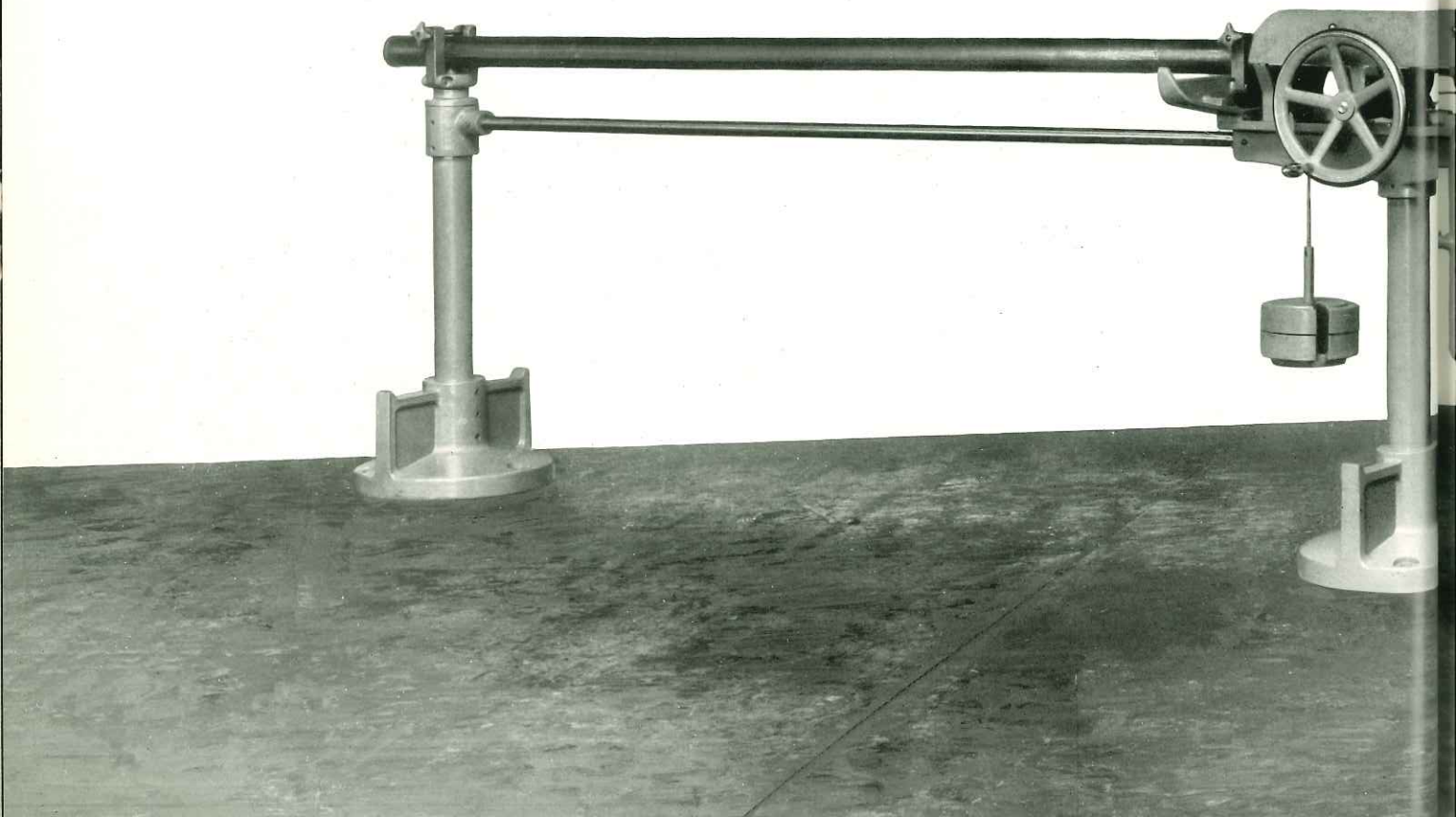

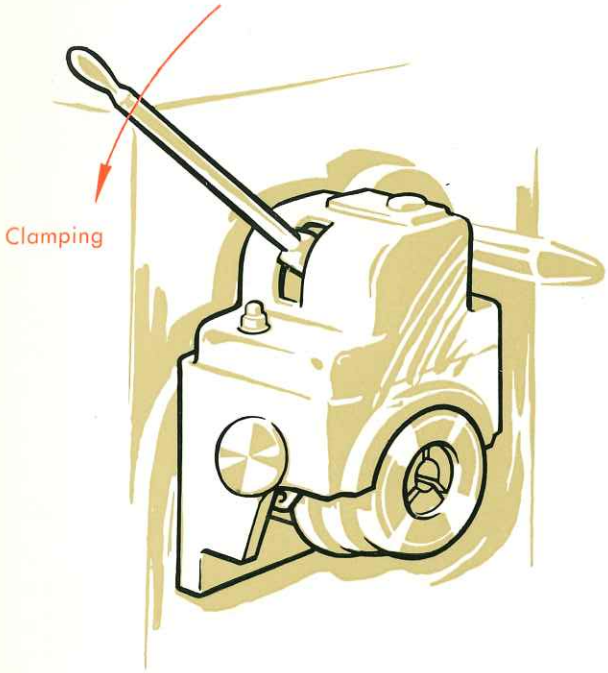

HAND-OPERATED COLLET CHUCK

The spindle nose conforming to DIN 55022 is suitable for mounting all normal work holding equipment, such as two-jaw chuck, three-jaw chuck, faceplate, collet chuck, etc.

Turret lathe work, however, calls in addition for quick-acting and dependable chucking equipment, particularly on batch production. Electrically and air-operated chucks have therefore been developed to effect a considerable saving in time. A further advantage is that after initial setting they grip with uniform pressure independent of the operator, an important point when handling delicate and especially thin-walled workpieces. The photograph below shows a VDF turret lathe RS 50 arranged for chuck and bar work. On the Model RS 100 the bar stock is not guided in a bar feed tube but on rollers.

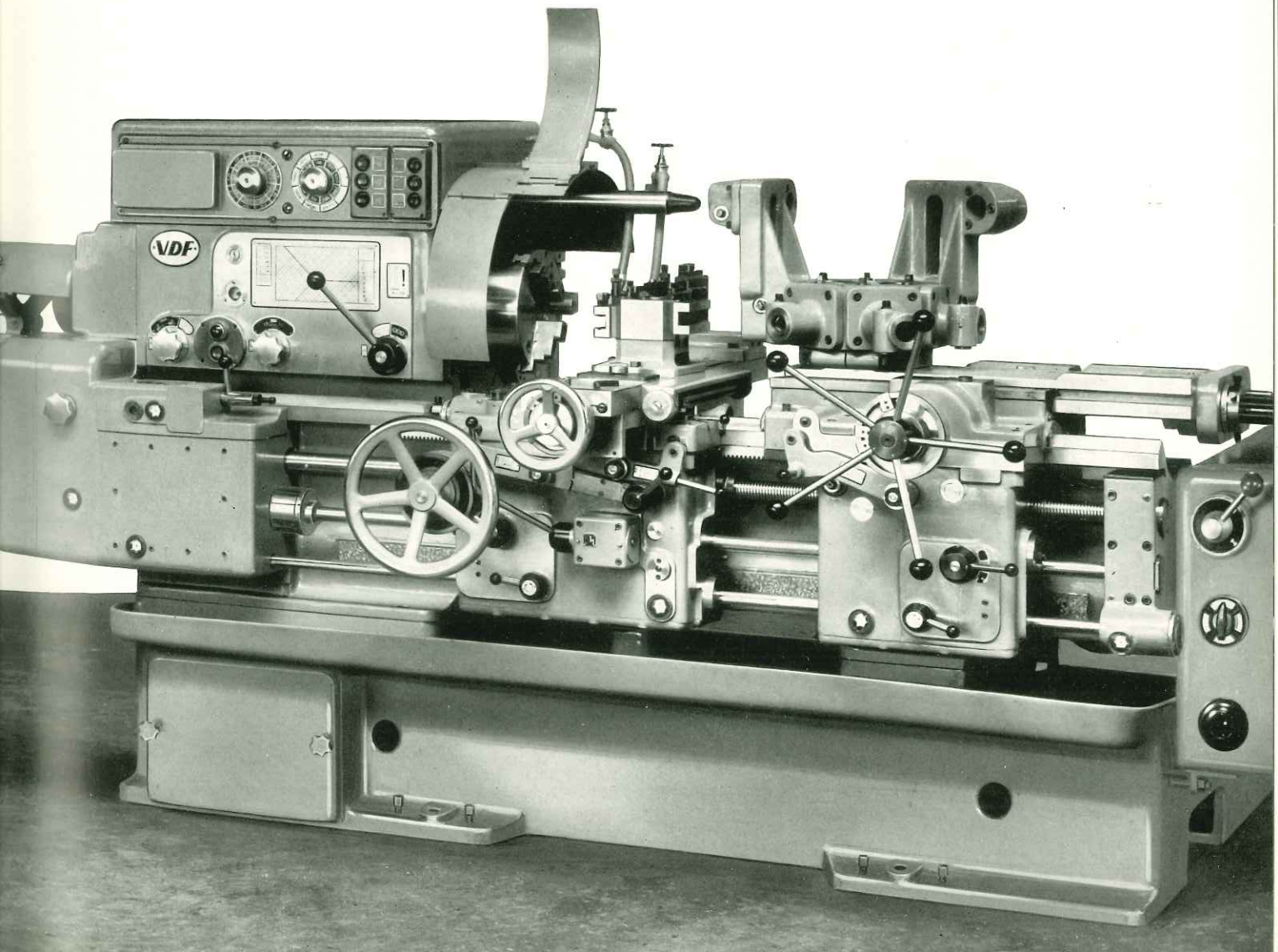

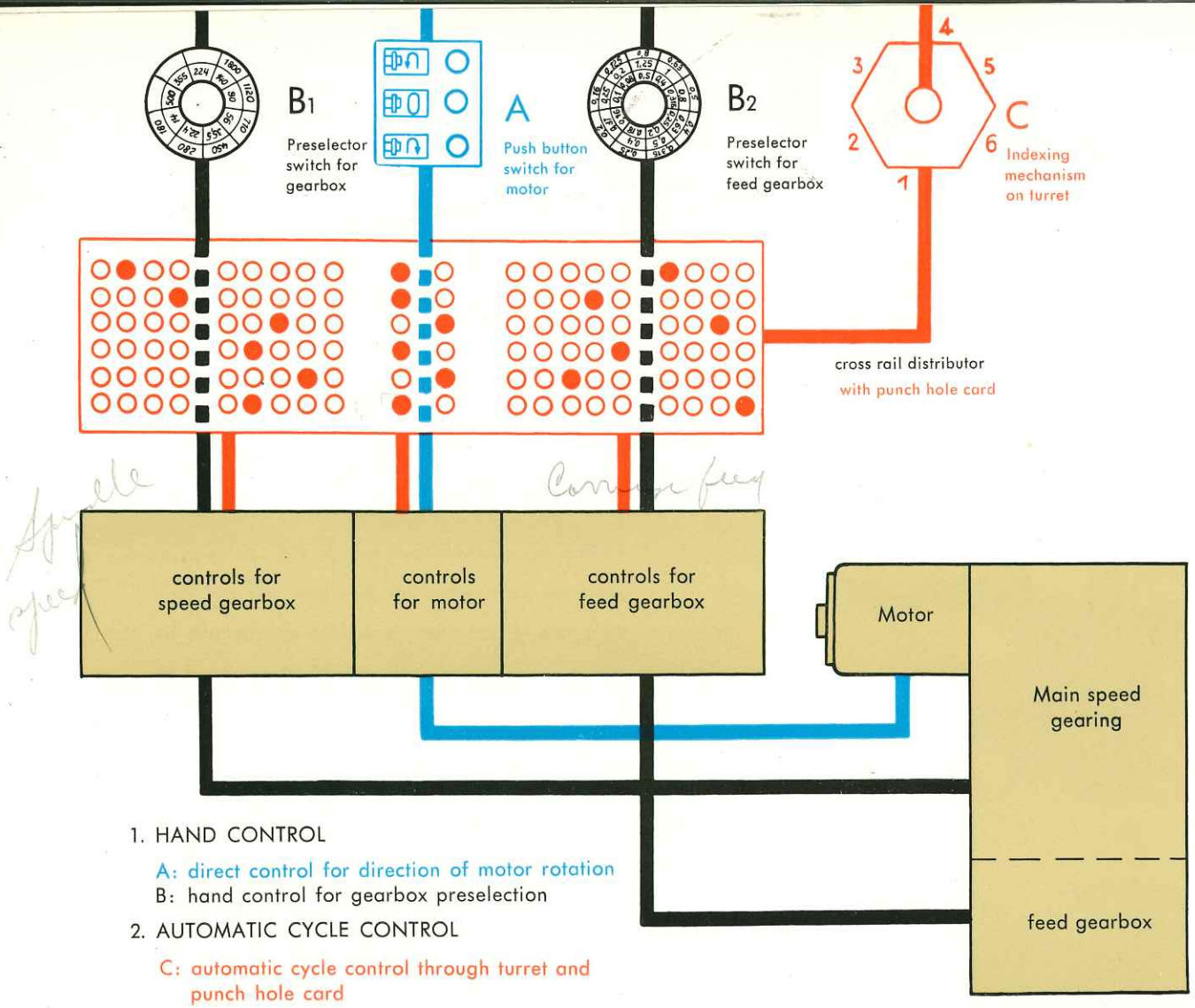

1. HAND CONTROL
   A: direct control for direction of motor rotation
   B: hand control for gearbox preselection
2. AUTOMATIC CYCLE CONTROL
   C: automatic cycle control through turret and punch hole card

The operation of the turret lathe calls for frequent and rapid speed changes, spindle reversal and feed changes. The economy of operation of these machines is therefore largely governed by the way in which these changes are performed. All VDF turret lathes incorporate electric automatic cycle control for speeds and feeds in order to render all operations fool-proof and rapid, ensure favourable cutting speeds at all times, and make the operator's task easier.

The sequence of spindle speeds, direction of rotation, and feeds are laid down in a punch hole card prepared by the Works planning department. The control changes take place according to the position of the turret. The operator's functions are therefore confined to indexing the turret and traversing the slides to their requisite positions.

In addition to the automatic cycle control each VDF turret lathe is equipped with electric preselector control. The desired spindle speed and feed can be selected on two dials during the normal operating sequence, i.e. the cycle can be interrupted by pressing the selector knobs to engage the values selected by hand. Speeds and feeds must not be changed during roughing whilst the tool is still cutting, as the tool would then be overloaded.

The feed control actuates the carriage and turret slide at the same time. Both aprons incorporate three-speed backgears to permit adapting the feeds to individual requirements.

The automatic cycle control makes it possible to reduce idle times to such an extent that they are almost as short as on a single-spindle automatic. Short setting-up times and versatility, special assets of the turret lathe, are, however, fully retained.

SETTING THE AUTOMATIC CYCLE CONTROL ON THE VDF TURRET LATHE ▶

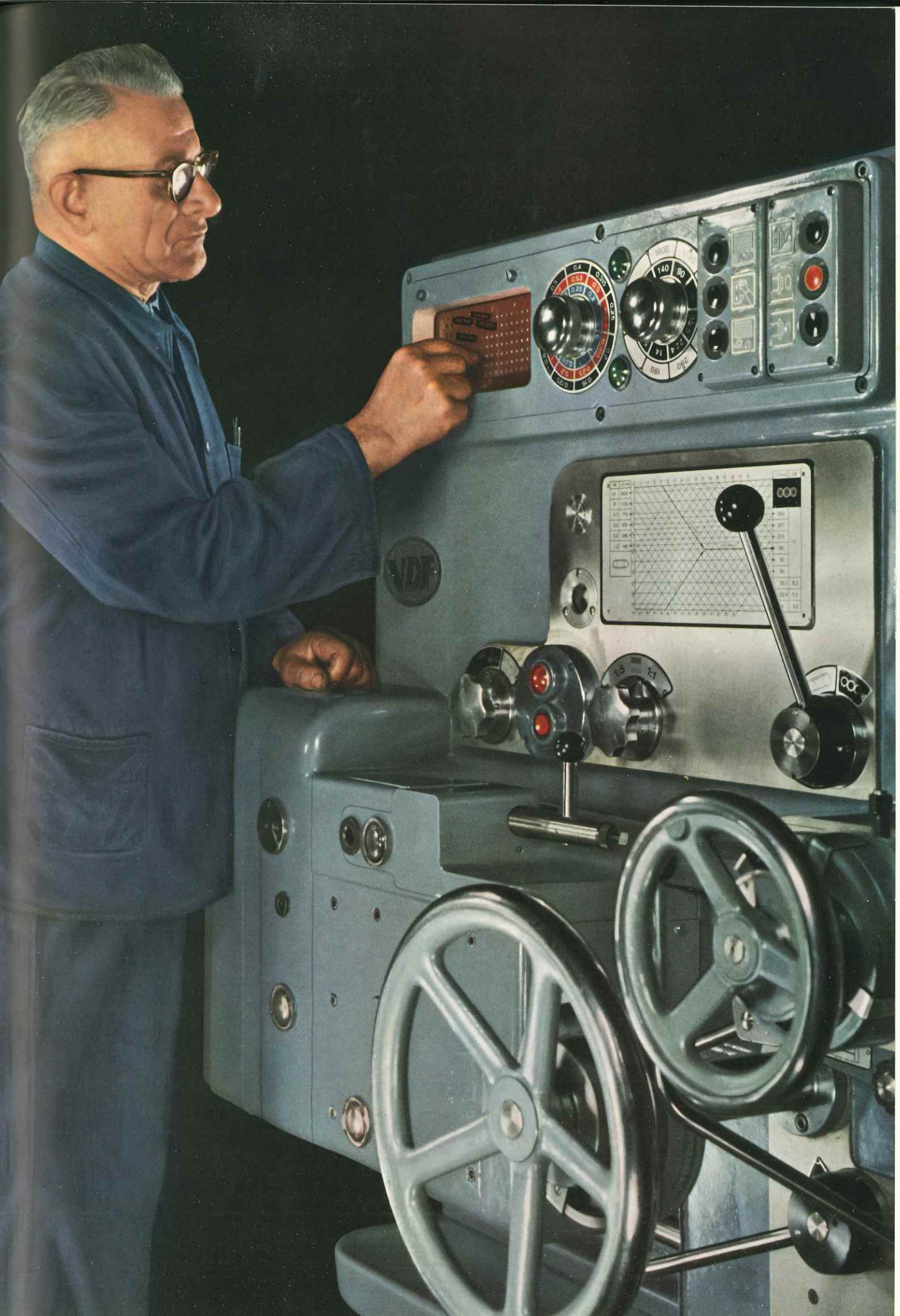
VDF
1:5
1:1

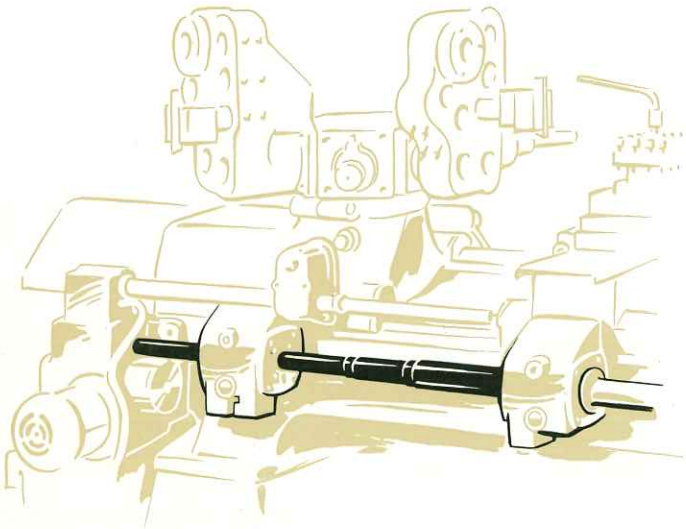

RAPID TRAVERSE SHAFT FOR LONGITUDINAL MOTION OF CARRIAGE ON MODELS RS 80 AND RS 100

The above photograph shows the slipping clutch on the feed shaft. This clutch protects the mechanism in the event of over-run of a slide. The illustration also shows the stops for the carriage with retractable stop bar carrying notches for coarse setting, spaced two inches apart.

The shaft below the feed shaft transmits the rapid cross traverse of the carriage. The rapid traverse motor and gearing is flange-mounted on the rear of the bed.

On Models RS 80 and RS 100 the same motor also provides the longitudinal rapid traverse of carriage and turret slide. The drive shaft is located on the rear of the bed below the control shaft for the automatic cycle control.

The backgears for the feed drive in the headstock are shown in the kinematic diagram on page 13. Two ratios can be engaged: 5 : 1 for fine feeds, or 1 : 4 (1 : 2 on Models RS 50 and RS 63) for coarse feeds. The diagram below shows the continued transmission for the feed drive.

1. Drive shaft in the headstock for the feed motions
2. Change gear train for screw-cutting
3. Reversing mechanism for leadscrew and feedrod
4. Leadscrew for carriage and turret slide (on Model RS 50 and RS 63 for carriage only)
5. 9-speed feed gearbox with electro-magnetic clutches
6. Slipping clutch on feed shaft
7. Feed reversing gears for carriage
8. 3-speed backgear for carriage (1.6 : 1, 1 : 1, 1 : 1.6)
9. Longitudinal and cross feed drive for carriage
10. Feed shaft for carriage and turret slide
11. Feed reversing gears for turret slide
12. 3-speed backgear for turret slide (1.6 : 1, 1 : 1, 1 : 1.6)
13. Longitudinal feed drive for turret slide

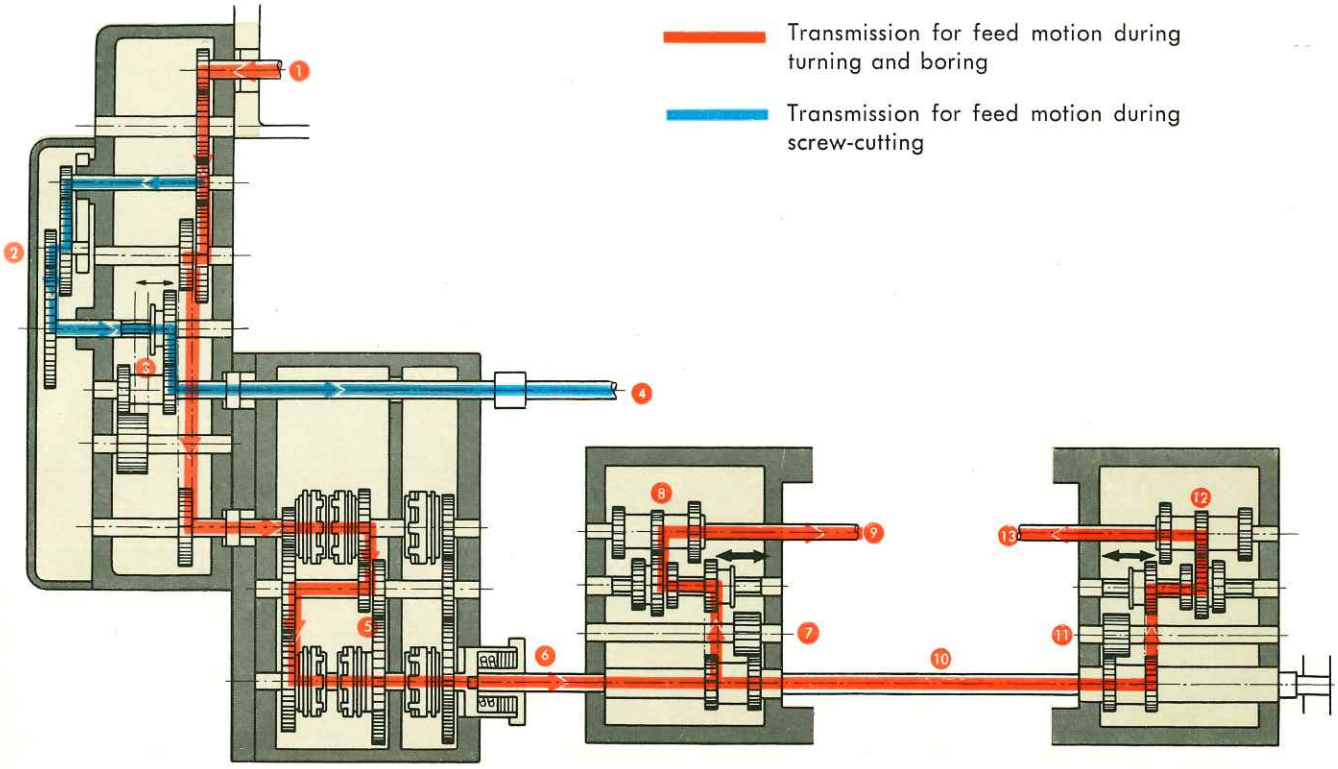

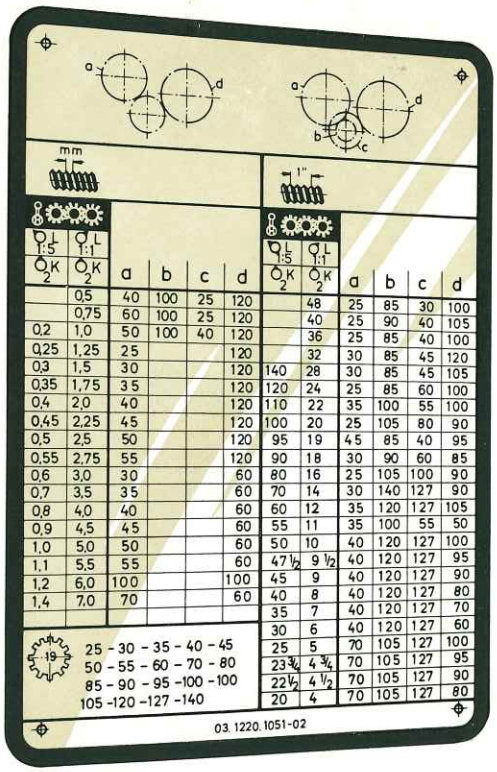

mm						1"					
L 1:5 / K 2	L 1:1 / K 2	a	b	c	d	L 1:5 / K 2	L 1:1 / K 2	a	b	c	d
	0,5	40	100	25	120		48	25	85	30	100
	0,75	60	100	25	120		40	25	90	40	105
0,2	1,0	50	100	40	120		36	25	85	40	100
0,25	1,25	25			120		32	30	85	45	120
0,3	1,5	30			120	140	28	30	85	45	105
0,35	1,75	35			120	120	24	25	85	60	100
0,4	2,0	40			120	110	22	35	100	55	100
0,45	2,25	45			120	100	20	25	105	80	90
0,5	2,5	50			120	95	19	45	85	40	95
0,55	2,75	55			120	90	18	30	90	60	85
0,6	3,0	30			60	80	16	25	105	100	90
0,7	3,5	35			60	70	14	30	140	127	90
0,8	4,0	40			60	60	12	35	120	127	105
0,9	4,5	45			60	55	11	35	100	55	50
1,0	5,0	50			60	50	10	40	120	127	100
1,1	5,5	55			60	47½	9½	40	120	127	95
1,2	6,0	100			100	45	9	40	120	127	90
1,4	7,0	70			60	40	8	40	120	127	80
						35	7	40	120	127	70
						30	6	40	120	127	60
						25	5	70	105	127	100
						23¾	4¾	70	105	127	95
						22½	4½	70	105	127	90
						20	4	70	105	127	80

19: 25 - 30 - 35 - 40 - 45
50 - 55 - 60 - 70 - 80
85 - 90 - 95 -100 -100
105 -120 -127 -140

03.1220.1051-02

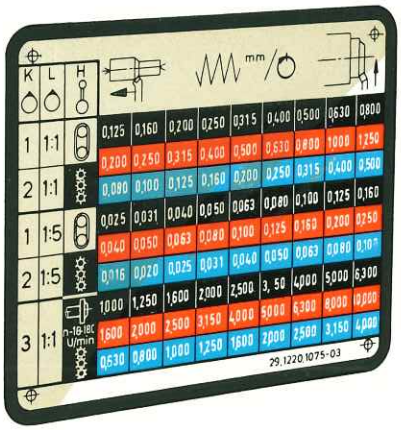

K	L	H	mm/○								
1	1:1		0,125	0,160	0,200	0,250	0,315	0,400	0,500	0,630	0,800
			0,200	0,250	0,315	0,400	0,500	0,630	0,800	1,000	1,250
2	1:1		0,080	0,100	0,125	0,160	0,200	0,250	0,315	0,400	0,500
1	1:5		0,025	0,031	0,040	0,050	0,063	0,080	0,100	0,125	0,160
			0,040	0,050	0,063	0,080	0,100	0,125	0,160	0,200	0,250
2	1:5		0,016	0,020	0,025	0,031	0,040	0,050	0,063	0,080	0,100
3	1:1	n-19-1E U/min	1,000	1,250	1,600	2,000	2,500	3, 50	4,000	5,000	6,300
			1,600	2,000	2,500	3,150	4,000	5,000	6,300	8,000	10,000
			0,630	0,800	1,000	1,250	1,600	2,000	2,500	3,150	4,000

29.1220.1075-03

The lever positions for the backgears in the two aprons are marked black, red and blue. These colours are also found on the dial of the feed setting knob on the control panel and feed plate, permitting rapid and dependable selection of the feeds. The feed table shown here applies to the Models RS 50 and RS 63, with a backgear ratio 1 : 2 for the coarse feeds. As the backgear ratio on Models RS 80 and RS 100 is 1 : 4, the feed values in position 3 of the left-hand backgear knob are half those indicated here.

All gears between the drive shaft in the headstock and the feed shaft together with the reversing gears are housed in the enclosed compartment at the rear of the change gears for the leadscrew drive. These gears are oil-bath lubricated. An oil pump in the feed gearbox delivers the oil for the force-feed lubrication.

WIRING UP THE MAGNETIC CLUTCHES IN THE FEED GEARBOX ▶

VDF

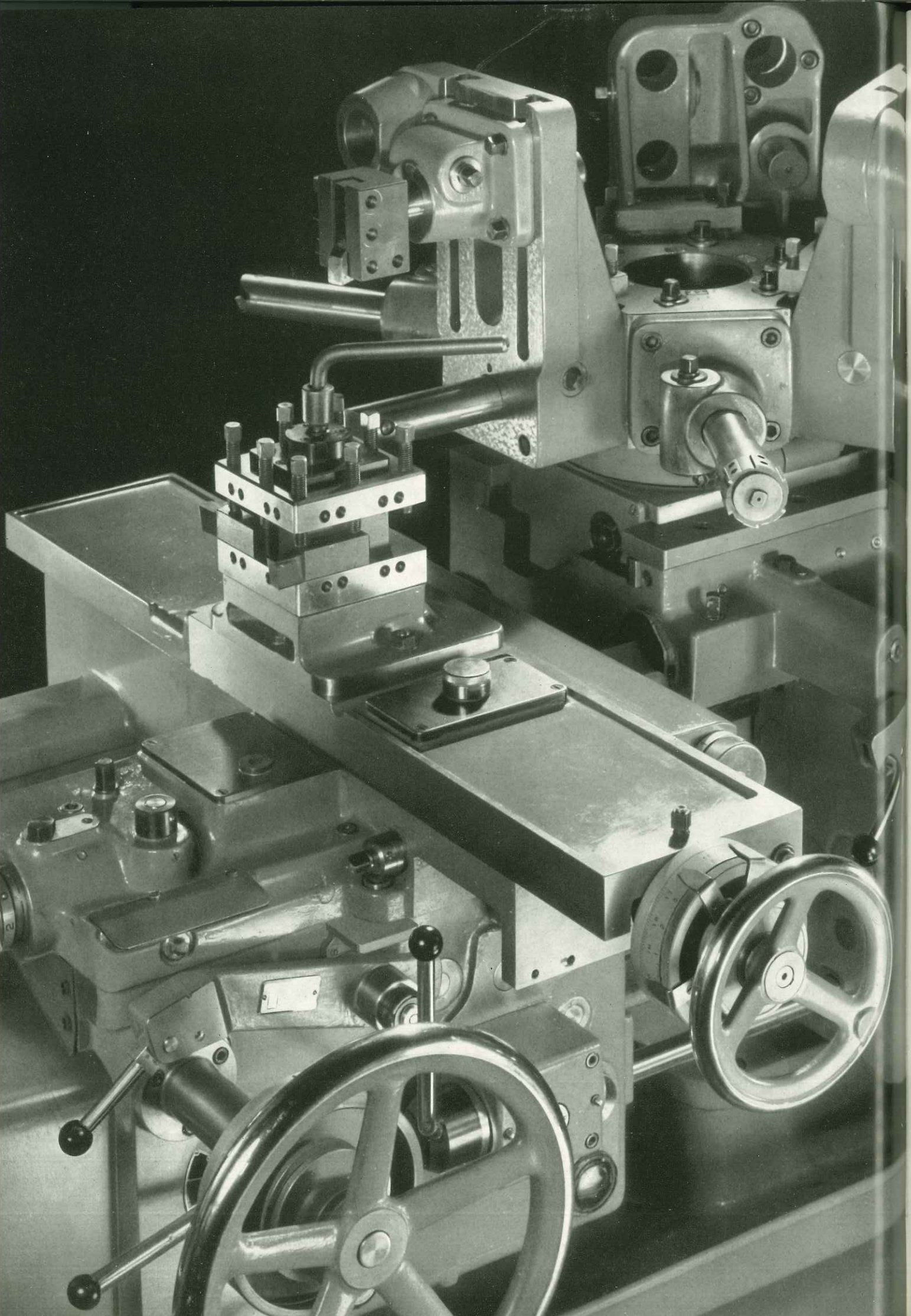

All controls for the carriage are conveniently arranged on the apron. One large handwheel each with dial for the longitudinal and cross motions are designed to obviate incorrect operation. The cross travel of the slide can be set accurately to a tenth of an inch by the long rapid cross traverse lever. The stops for the longitudinal traverse are located on the front of the carriage (see also page 18), those for the cross traverse are found on the right-hand side of the cross slide, protected against swarf. When the saddle or cross slide travel against a stop, the feed motion is tripped through the dog clutches.

All slides have T-slots for mounting the 4-way toolpost. Extended cross slides have a rear platform with longitudinal or transverse T-slots for mounting additional toolposts.

The 4-way toolpost has tapped holes on each side for securing adaptors for additional tools. The 4-way toolpost can on request be replaced by a quick-change toolpost.

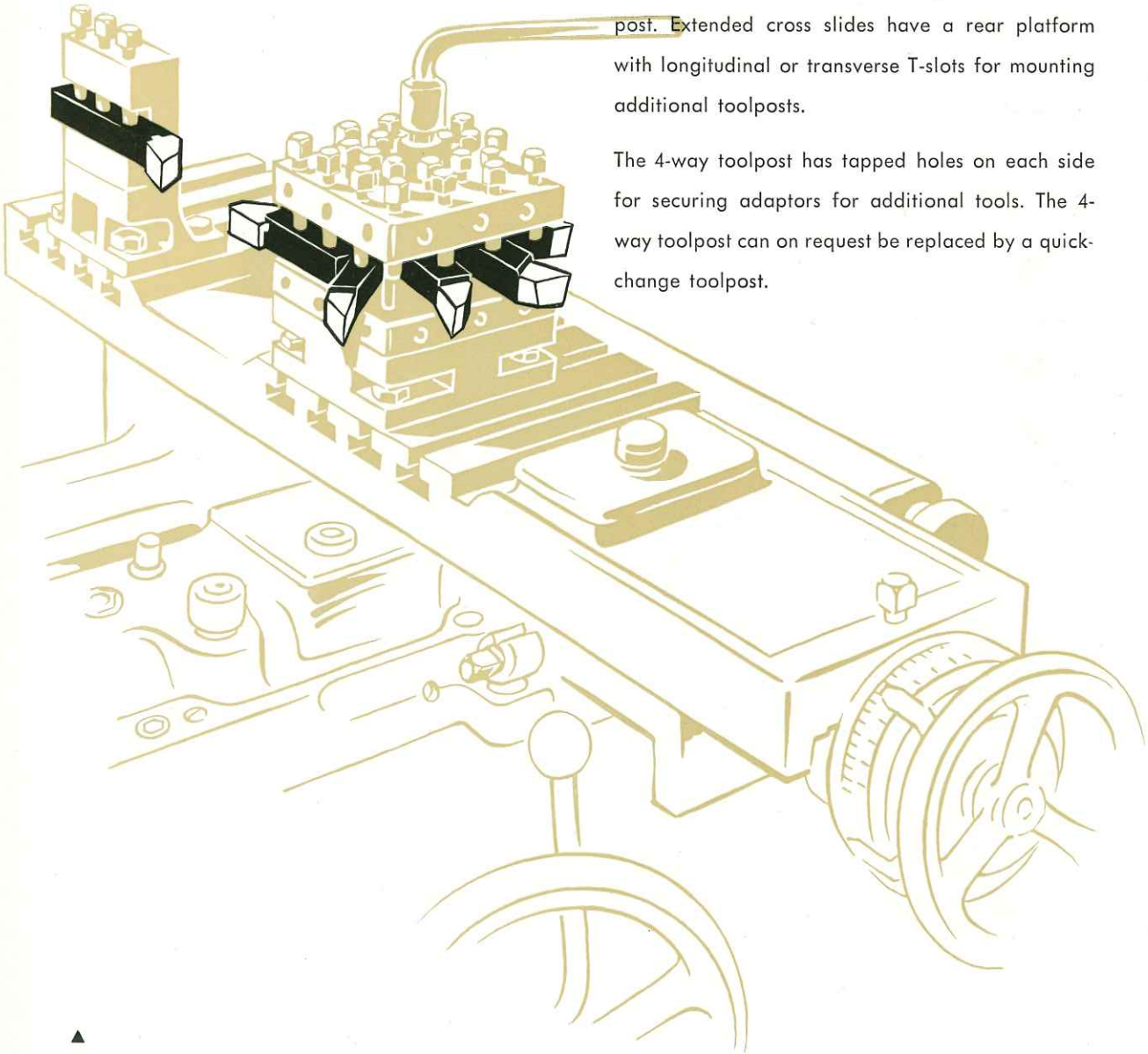

▲ *4-WAY TOOLPOST WITH SPECIAL REAR TOOLPOST ON EXTENDED CROSS SLIDE*

◀ *4-WAY TOOLPOST ON SHORT CROSS SLIDE*

A taper turning attachment can be mounted in front of the carriage apron below the slide. The maximum length of taper that can be turned is eight inches on Models RS 50 and RS 63, and ten inches on Models RS 80 and RS 100, whilst the maximum included taper angle to either side is 7° on all models. The attachment can be supplied for mounting on machines after leaving the Works.

A complete list of available extra equipment is given on page 3.

VDF TURRET LATHE RS 80 WITH TAPER TURNING ATTACHMENT

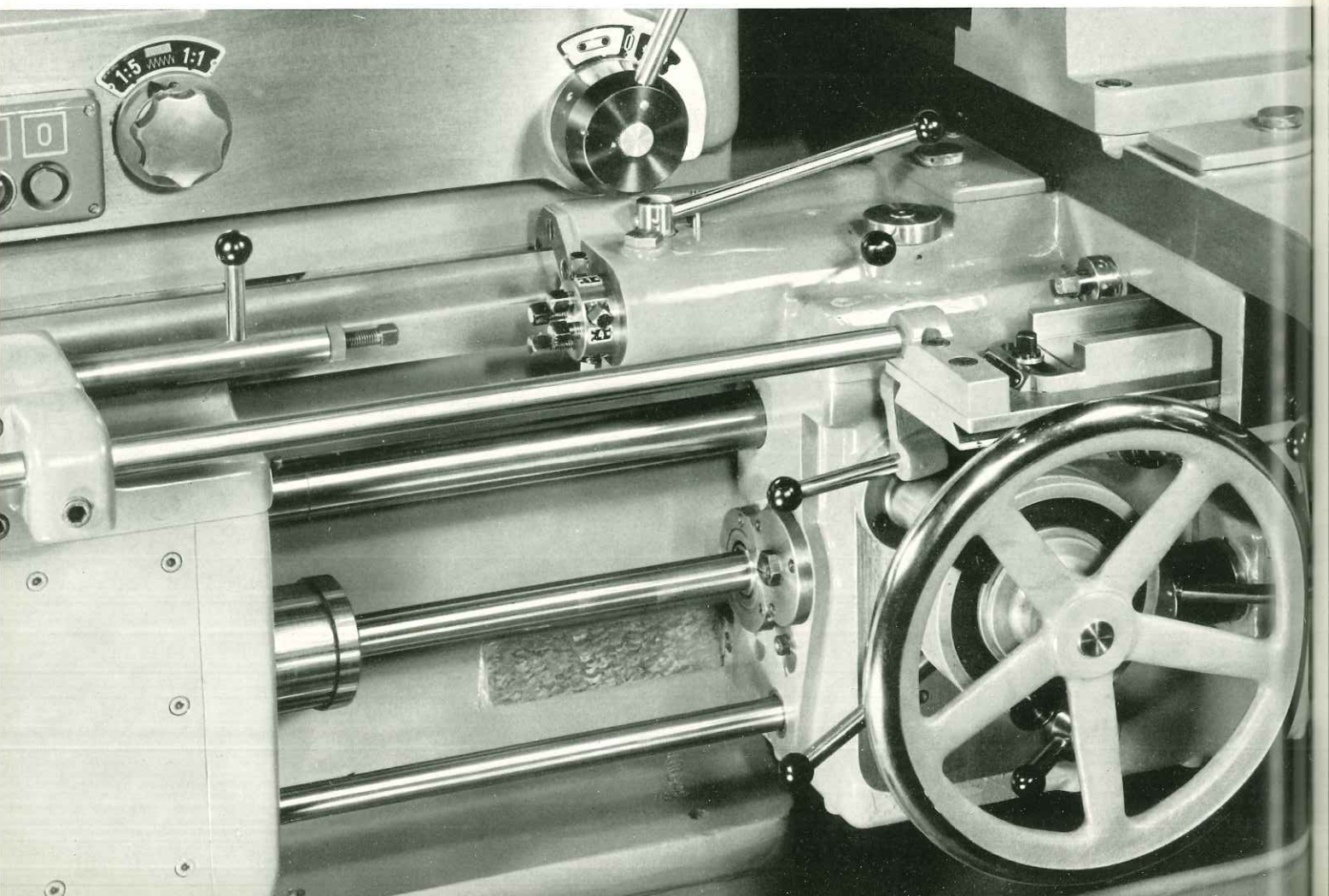

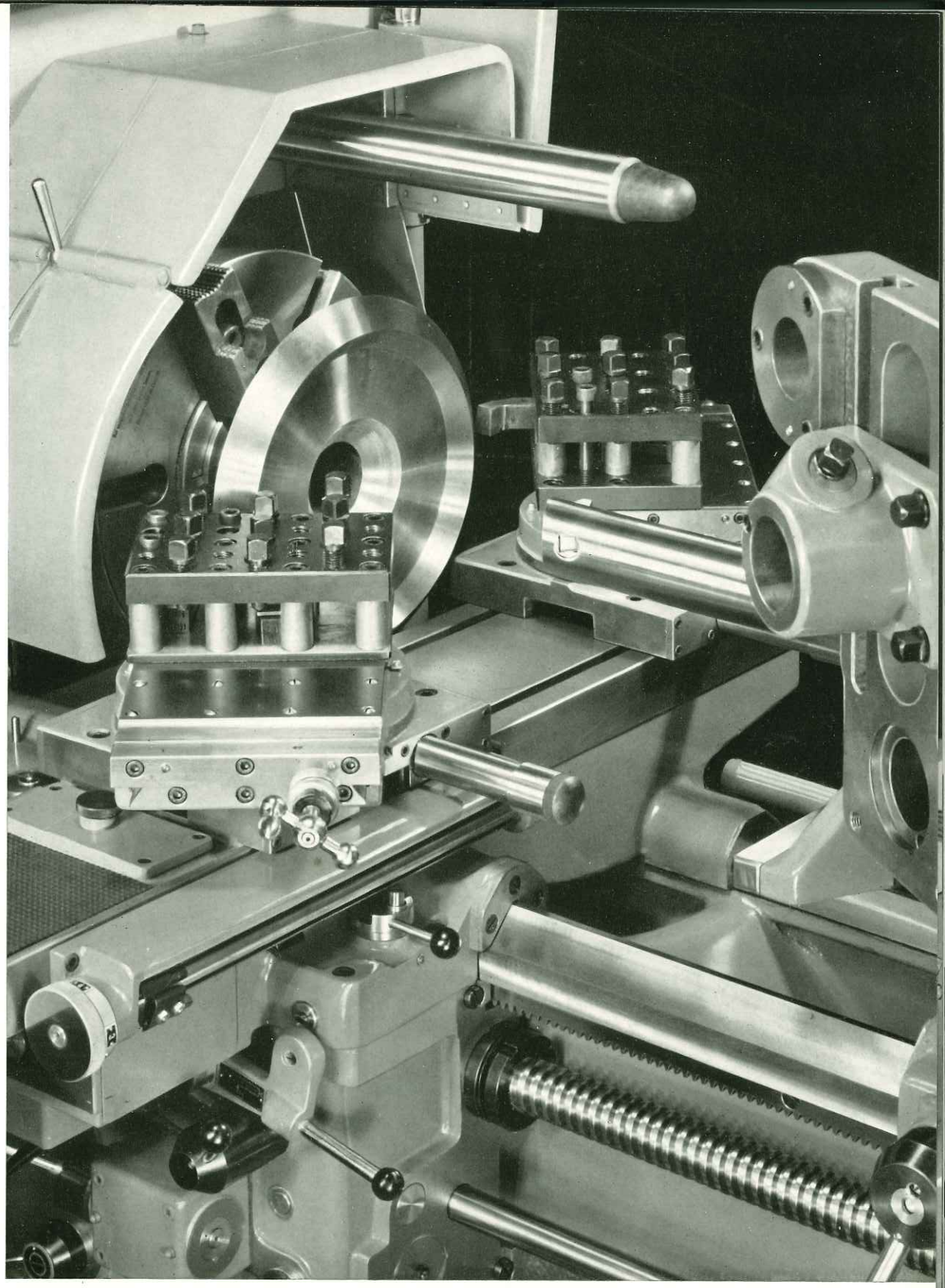

BEVEL TURNING ATTACHMENT ON VDF TURRET LATHE RS 80

The special bevel turning slides are designed for turning the tapered faces on bevel gear blanks. The slides are controlled from the turret through push rods. Both toolposts are mounted on a special extended cross slide.

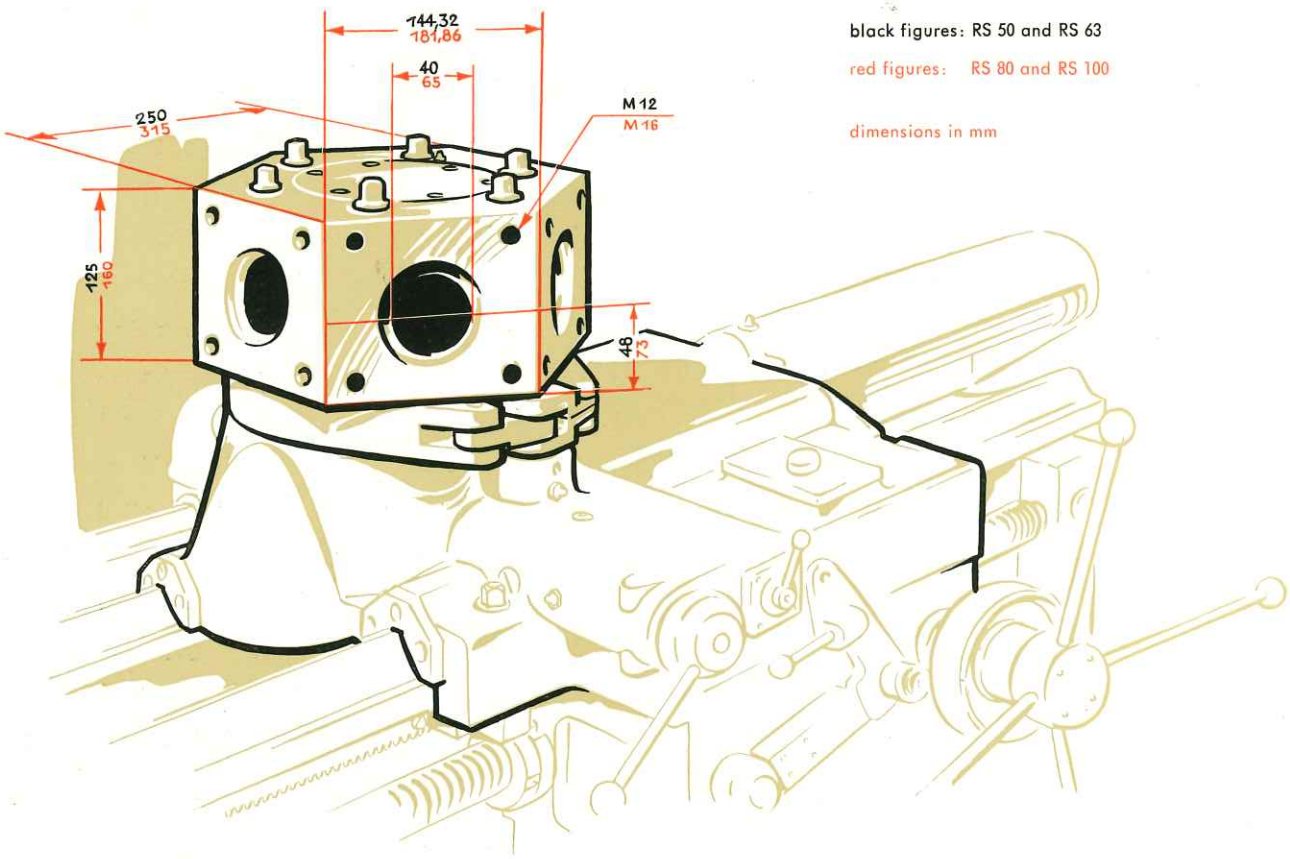

black figures: RS 50 and RS 63

red figures: RS 80 and RS 100

dimensions in mm

TURRET SLIDE ON RS 80

The design of the turret saddle differs on the various models. The small turret lathes RS 50 and RS 63 are of the capstan or ram-type, i.e. the saddle carries a ram slide on which the turret is mounted. These machines are called capstan lathes in Great Britain and other countries, ram-type turret lathes in North-America. The ram slide is operated by a large star handle. On the return stroke the turret locking mechanism is released, the turret indexes 60°, and re-locks on the forward stroke of the ram. The control drum for the automatic cycle at the same time alters spindle speeds, direction of spindle rotation, and feed, as desired.

On Models RS 80 and RS 100 the turret is direct mounted on the saddle which can be moved by the star handle or rapid traverse drive. The turret is likewise connected with the automatic cycle control. The turret is released, indexed by hand, and re-locked. If the machine is equipped with a leadscrew, it is possible to cut threads with the 4-way toolpost and turret on Models RS 80 and RS 100. On Models RS 50 and RS 63 with ram slide, only the carriage can be driven by the leadscrew. This is, however, no drawback as internal threads are only rarely produced with a cutting tool and thus with the leadscrew.

Oil pumps in the aprons supply lubricating oil through a pipe system to all gears, journals and bedways.

TURRET ON A MODEL RS 50 ▶

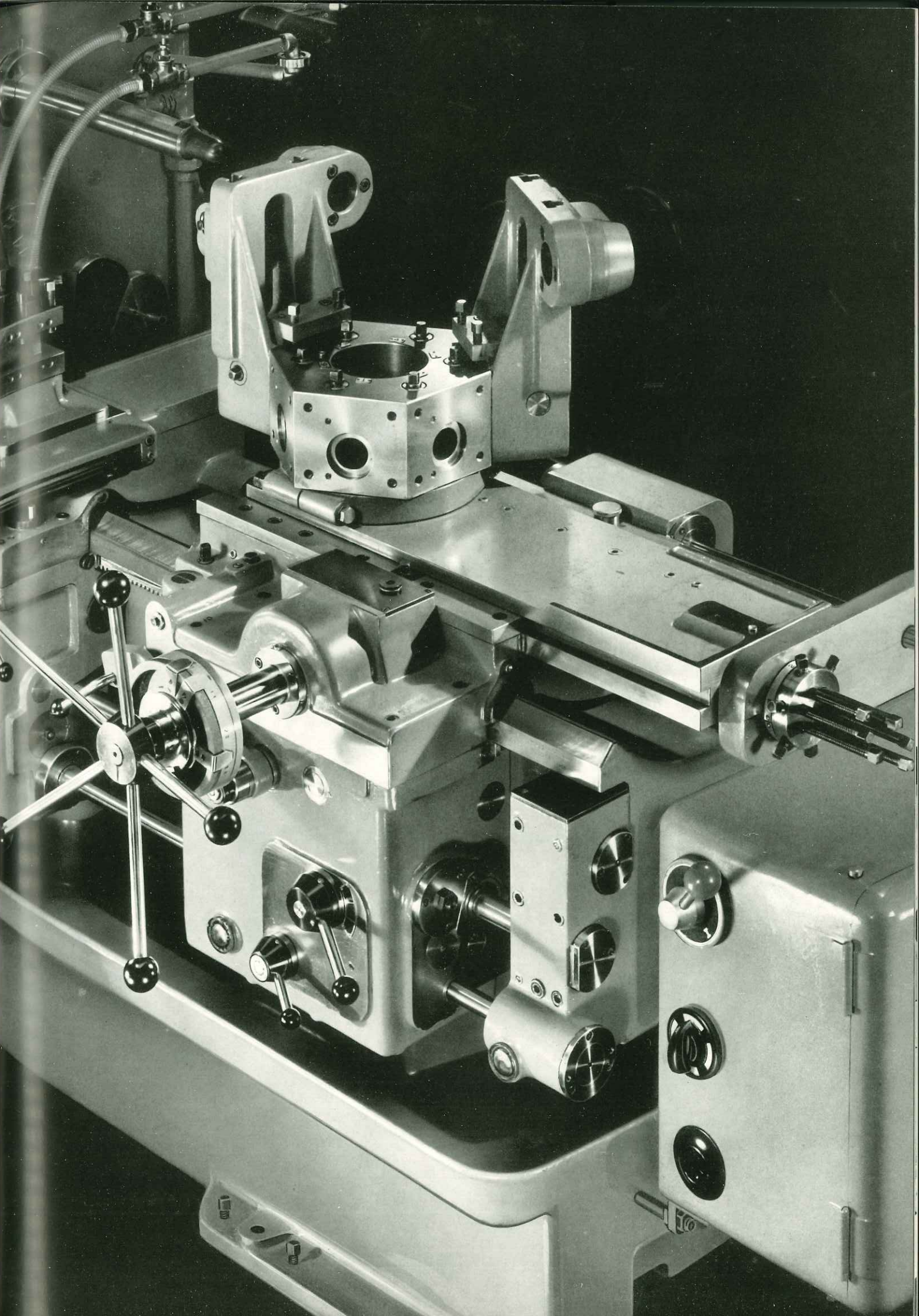

Coolant cannot be used during the machining of all materials, but is recommended wherever possible. VDF turret lathes are on request delivered with amply dimensioned coolant pumps which are equal to all requirements. The delivery pipe has two branch pipes through which the coolant is distributed to the various working areas on the workpiece. The coolant returns through the perforated bottom plate in the chip tray to the reservoir in the base of the machine. Dirt and swarf are separated on the bottom and at the struts of the reservoir, ensuring that only clean coolant is delivered by the pump to the work. The adjoining illustration shows the coolant equipment, the rapid traverse motor and the housing for the automatic cycle control drum on the turret slide. The sketch on page 18 shows the corresponding arrangement on Models RS 80 and RS 100.

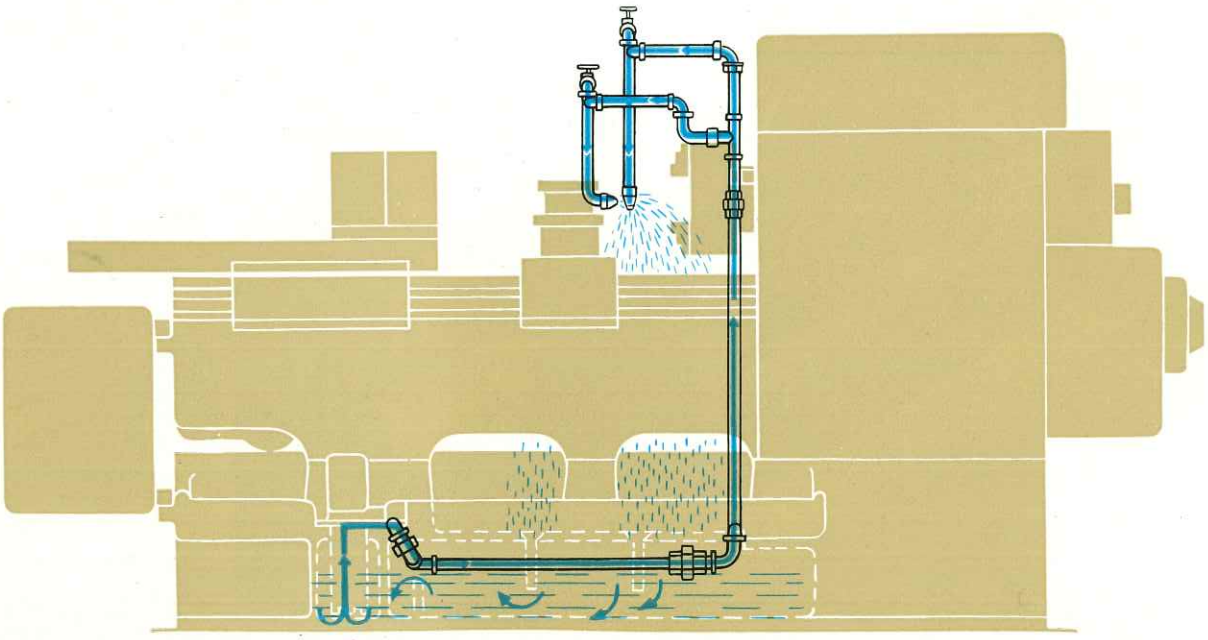

REAR VIEW OF VDF TURRET LATHE MODEL RS 50 ▶

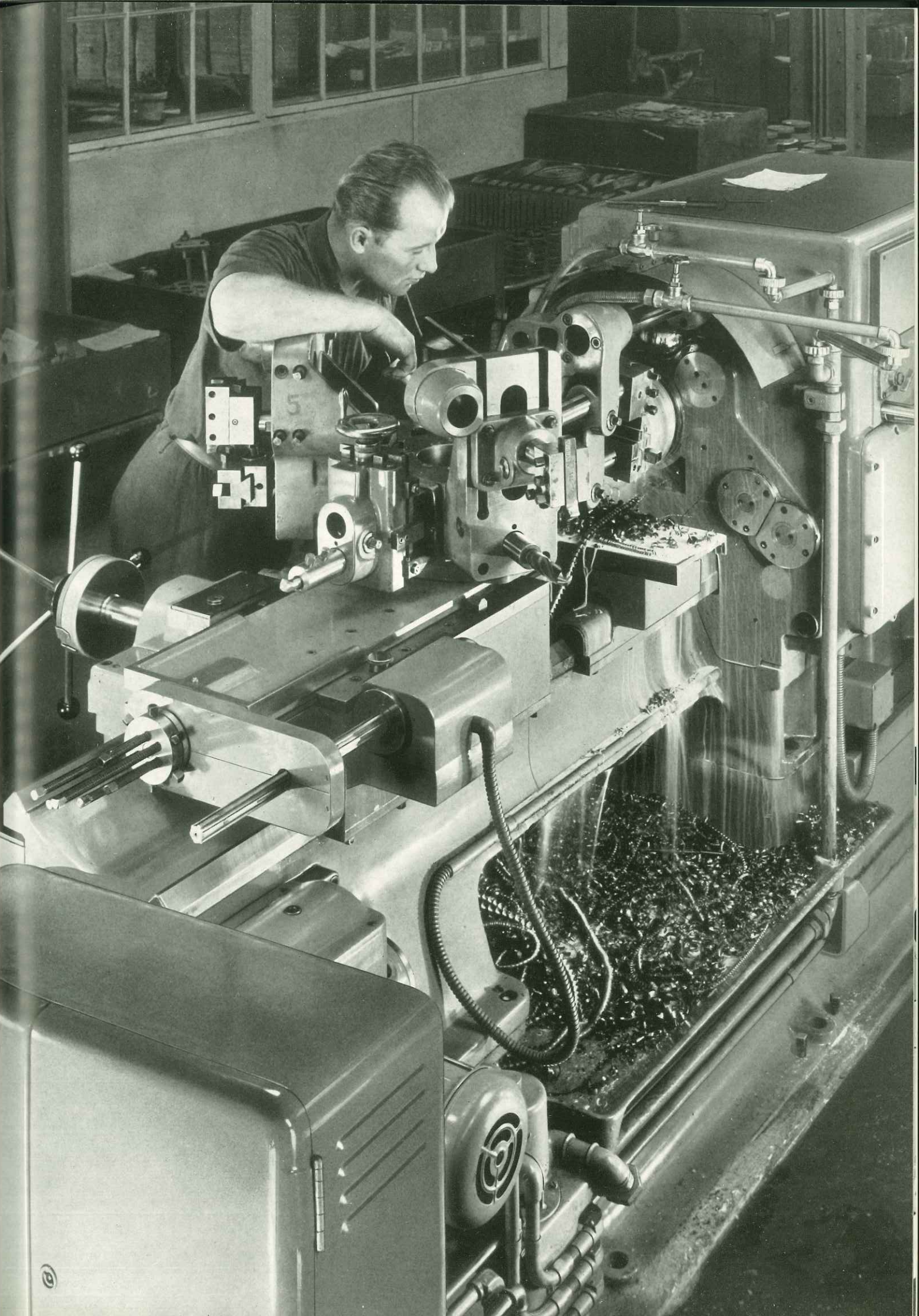

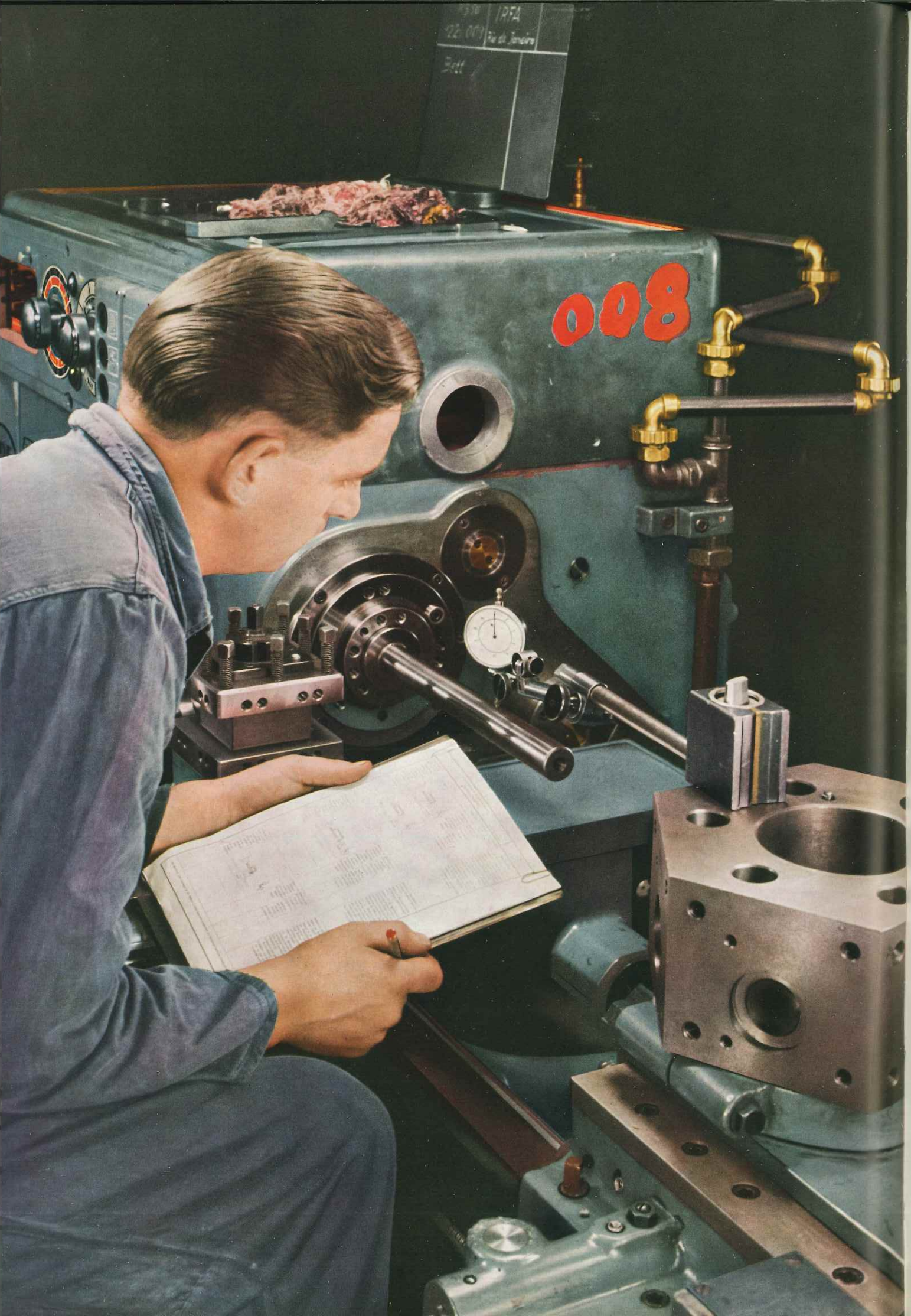
008

Even a casual study of the preceding pages will have given you a general idea of the design of VDF turret lathes. Quite a few years of design and development work were required before these easily operated machines became a reality. Factory and workshop can now call on a turret lathe which is equal to all requirements.

Our production and assembly are a guarantee for a really dependable, high-quality machine. Highest manufacturing standards are assured by modern batch production methods with continuous quality control, test running of all sub-assemblies prior to final assembly, and final acceptance test to DIN 8610 limits. The human element is, however, still the most important factor, notwithstanding the most up-to-date machines and production methods, and we have for this reason always laid particular stress on the thorough training of our skilled personnel.

You are always welcome to visit our Works in Hamburg, Hannover and Göppingen, where VDF machines are built.

◀ *WORKS TEST ON A VDF TURRET LATHE TO DIN 8610 LIMITS*

TOOLS AND TOOLHOLDERS FOR VDF TURRET LATHES

RS 50 · RS 63 · RS 80 · RS 100

For chuck work

	1 Set of 6 carbide-tipped tools for 4-way toolpost	010 182
	Overhead pilot bar with guard	010 205
①	Rotating steady bush (for use with hand-operated chuck only)	010 204
	Fixed steady bush (for use with power-operated chuck only)	010 237
②	Stub boring bar, heavy type, with pilot	010 210
③	Stub boring bar, light type, with pilot	010 225
④	Boring head	
	for RS and RS 63 boring capacity 4³/₈"–5¹/₈"	
	5¹/₈"–6"	
	for RS 50 · RS 100 boring capacity 6" –7"	
	7" –8¹/₄"	
	for RS 80 and 100 boring capacity 8¼"–10"	
	10" –11½"	
	11½"–13"	
	13" –14½"	
⑤	Toolholder, straight, plain	010 207
	ditto, multi-tool type	012 993
⑥	Toolholder, straight, adjustable	010 208
⑦	Toolholder, angular, plain	010 224
⑧	1 Set of 4 adaptor bushes	010 209
⑨	Taper shank adaptor sleeve	010 215
⑩	Floating reamer holder	010 216
⑪	Stub boring bar, heavy type, without pilot	010 211
⑫	Stub boring bar, light type, without pilot	010 212
⑬	Flanged toolholder, long	010 214
⑭	Flanged toolholder, short	010 213

The following tools are shown on pages 34 and 35:

⑮	Multiple toolholder	010 227
⑯	Adjustable single tool head	010 206
⑰	Multiple turning head	010 230
⑱	Recessing tool, light type	010 228
	Steady holder	010 231
⑲	Recessing tool, heavy type	010 229
	Adaptor flange	010 168
⑳	Self-releasing chasing head for international threads	010 233
	Tap and die holder	010 232
㉑	Combination boring bar and cutter holder	010 239
㉒	Adaptor toolholder for 4-way toolpost	012 986
㉓	Chamfering tool for adjustable, straight toolholder	010 238

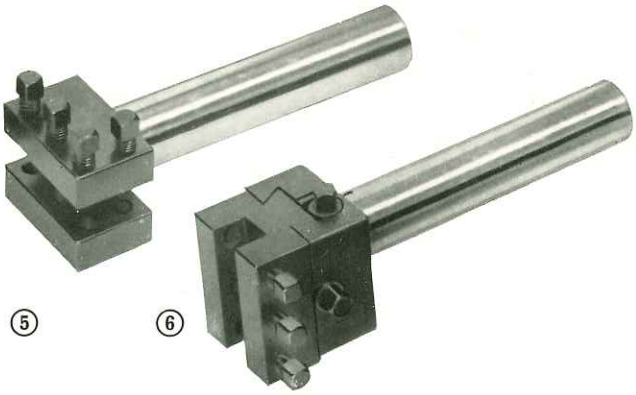

⑤ ⑥

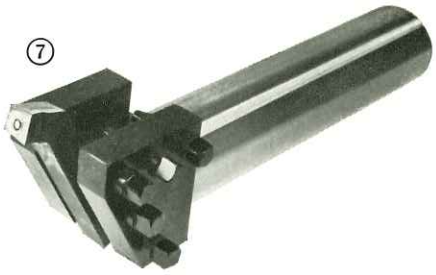

⑦

⑧

⑨

⑩

⑪ ⑫ ⑬

⑭

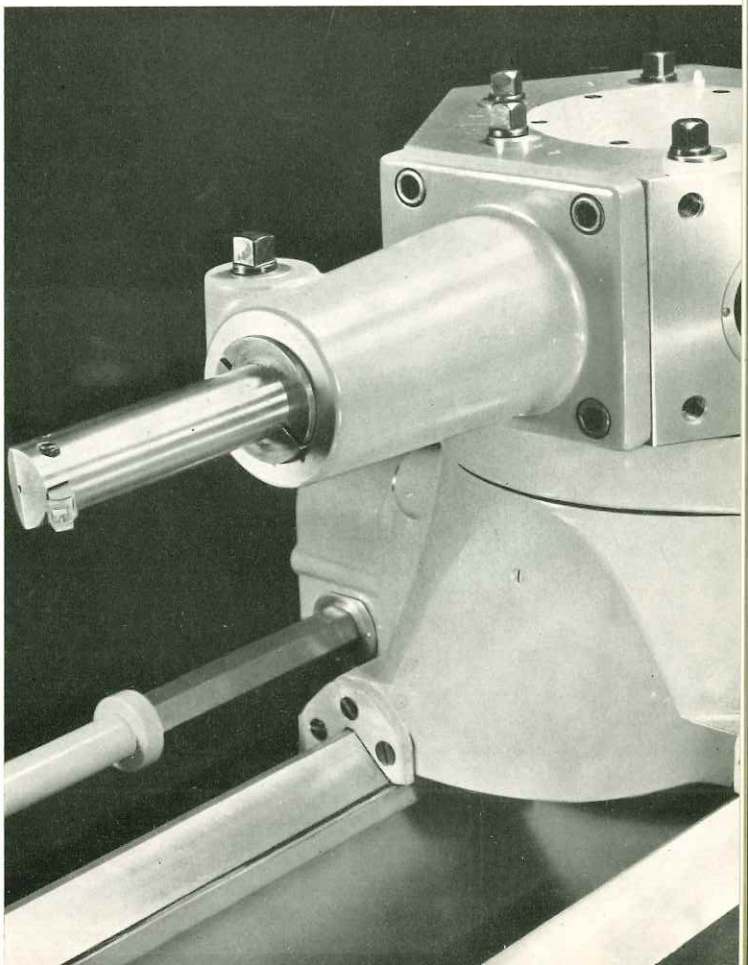

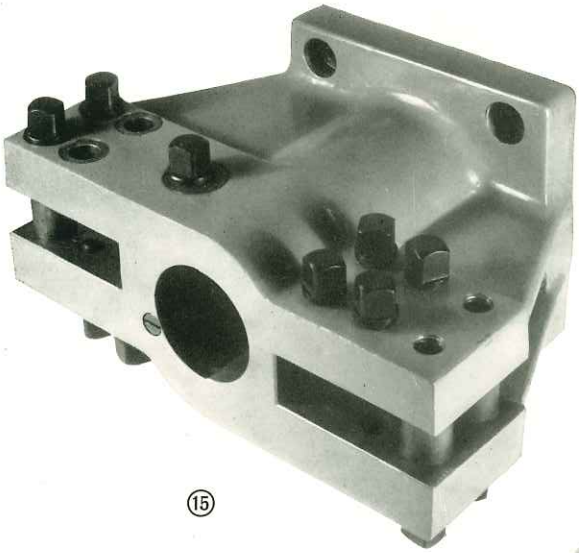

⑮

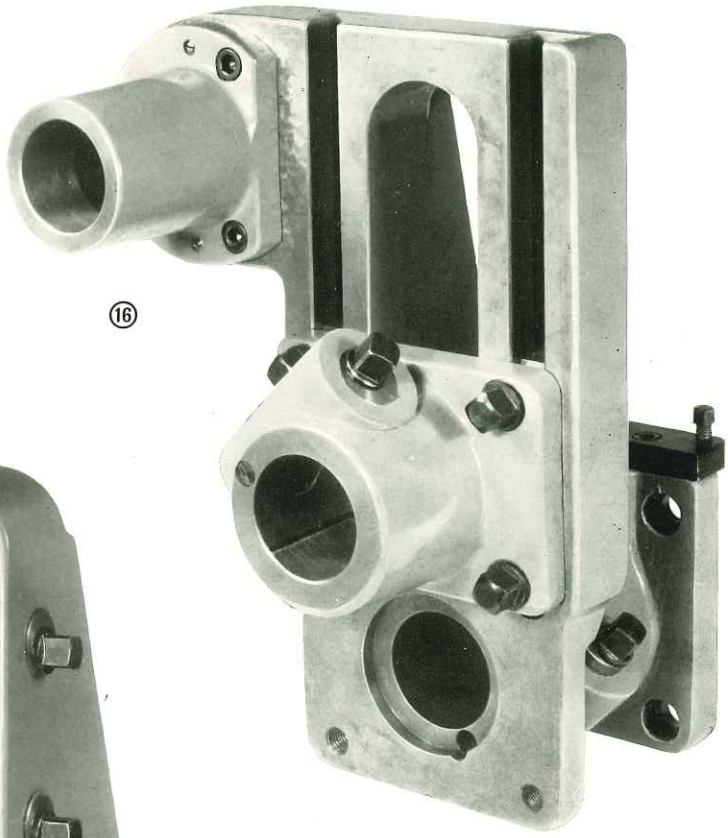

⑯

⑰

⑱

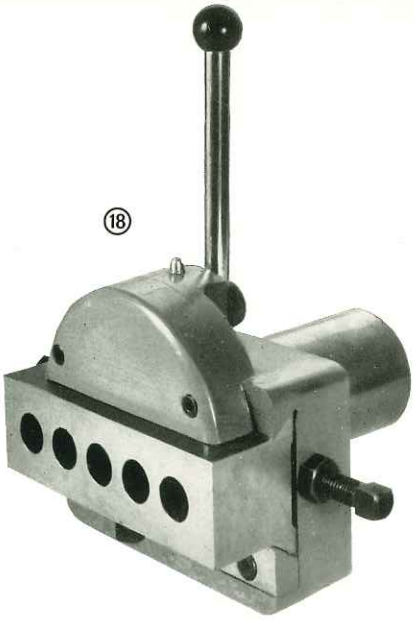

⑲

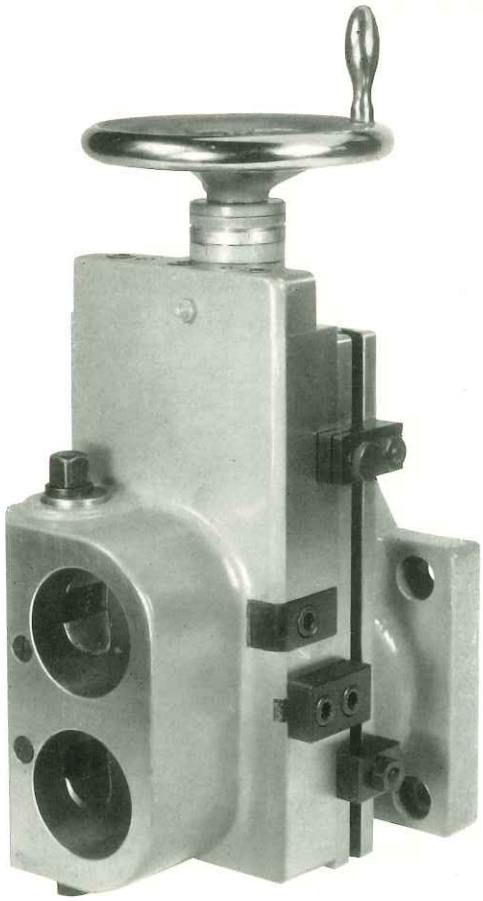

The tools shown on pages 32–37 may vary slightly for the different turret lathe models.

As it was not possible to show all tools and toolholders on these pages, we were obliged to leave out those tools which are either very rarely used, or illustrated on one of the preceding pages.

⑳

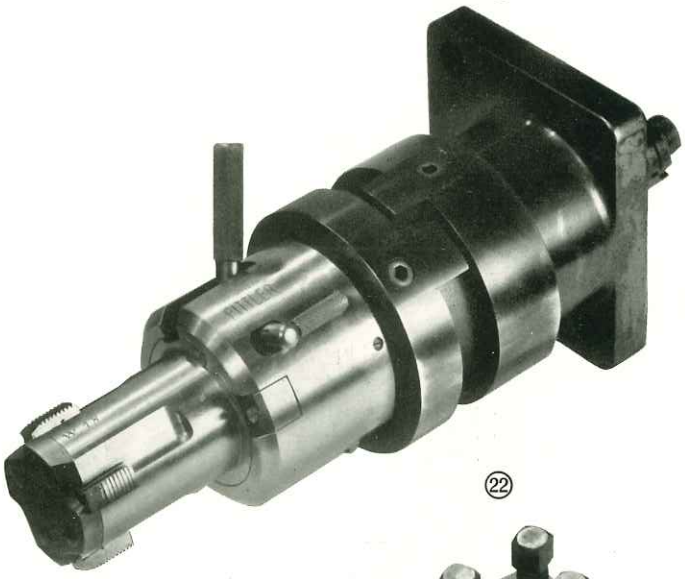

㉒

㉑

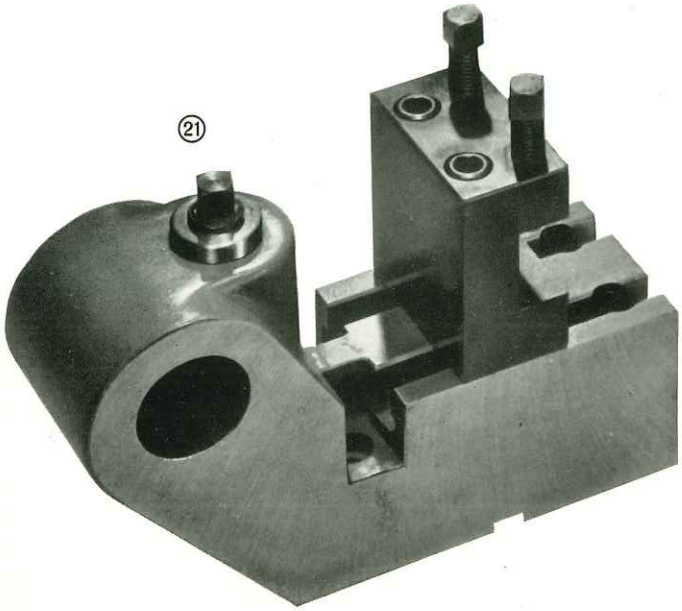

㉓

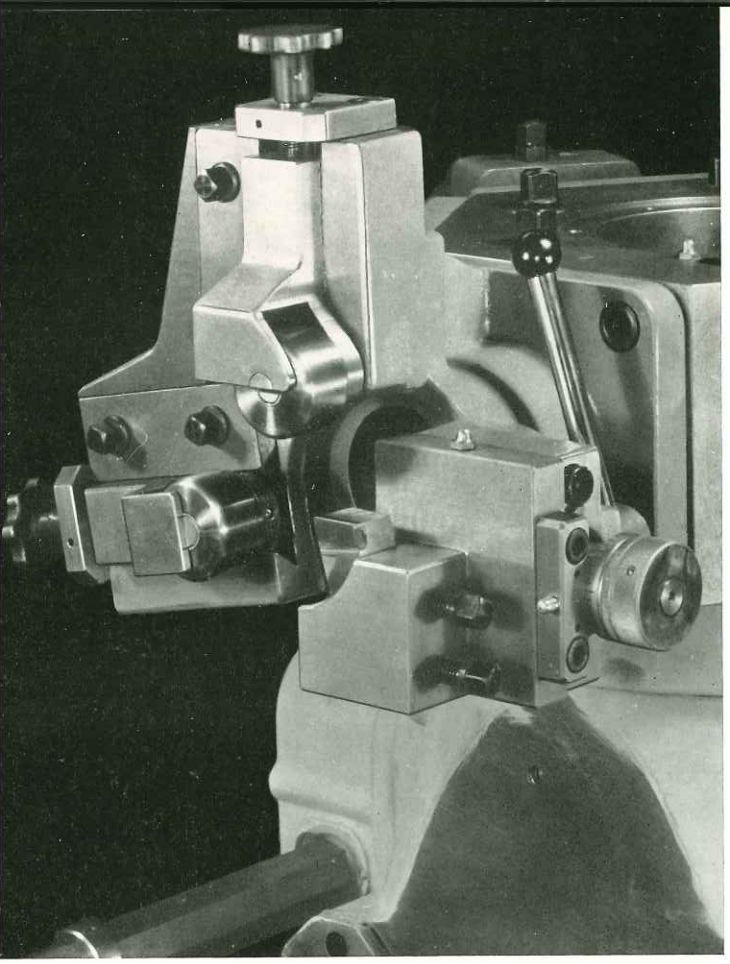

㉔

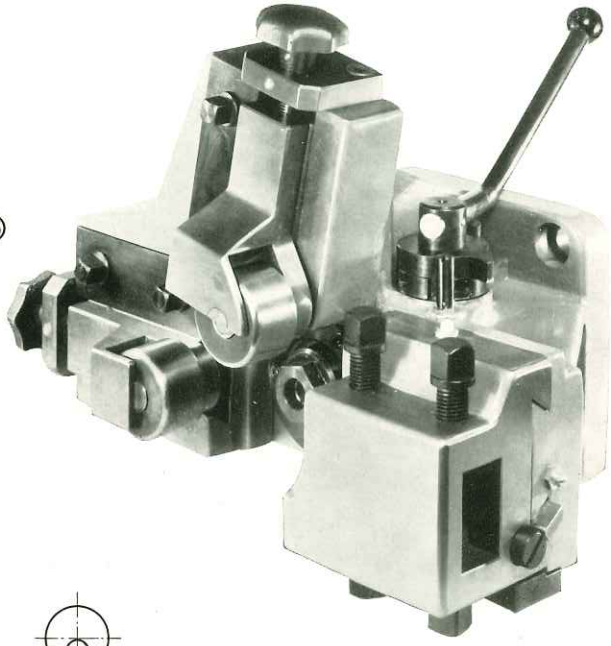

㉕

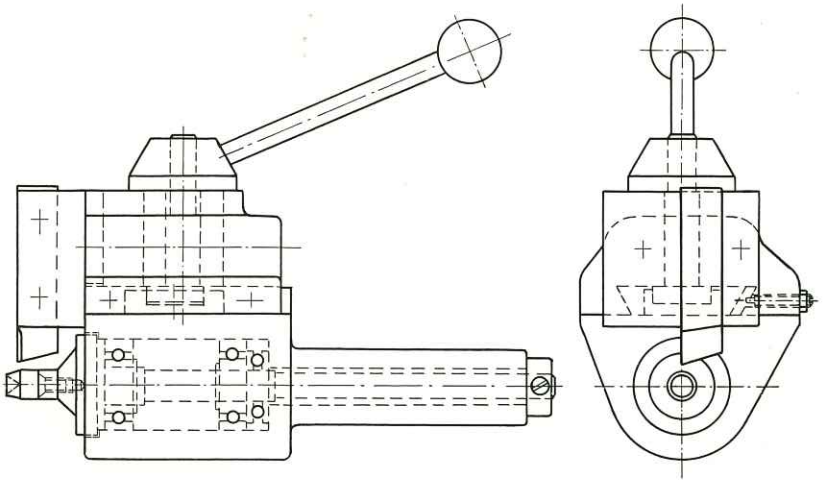

㉖

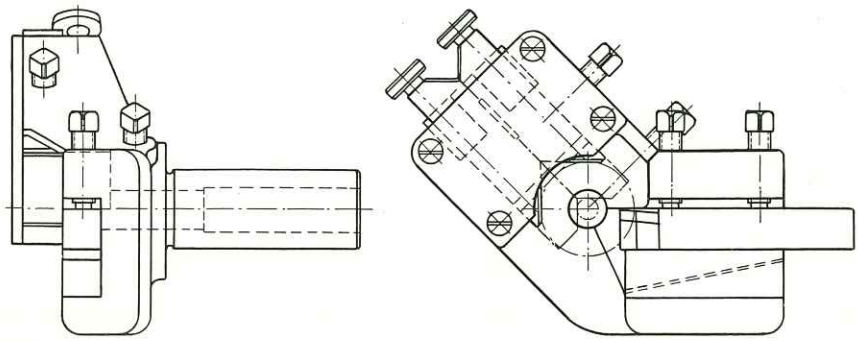

㉗

Tool and toolholders for bar work:

㉔	Roller turning tool	010 167
㉕	Centring and chamfering tool	010 166
㉖	Step turning tool	010 171
㉗	Chamfering and ending tool	010 172
㉘	Form turning and parting-off tool	010 174
㉙	Self-opening die head for external threads	010 180
㉚	Double roller box tool	010 173
	Adaptor flange	010 168
	Adjustable stock stop	010 175
	Dead centre	010 176
	Live centre	010 177
	Parting-off toolholder for 4-way toolpost	010 178
	Circular form toolholder	010 179

㉘

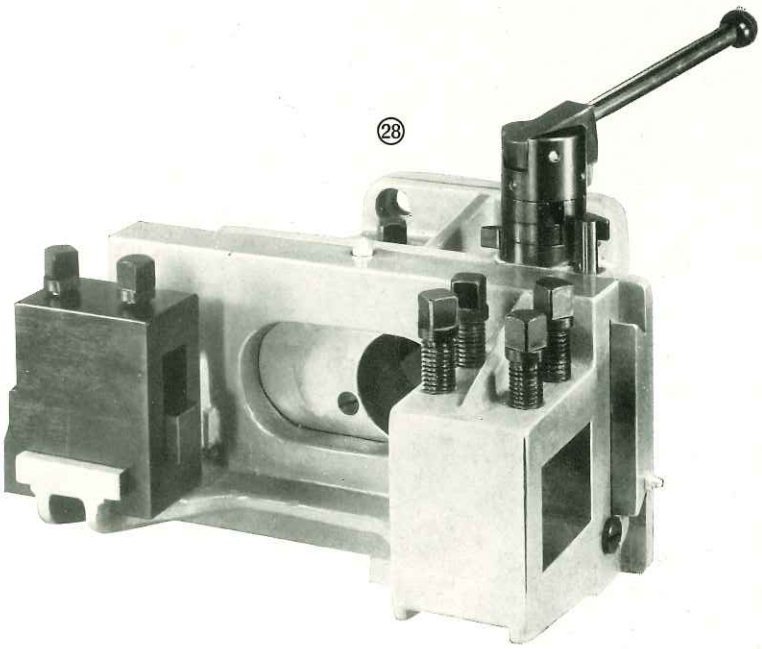

㉙

The following tools are also used for chuck work. Most of them are illustrated on pages 32–35.

	1 Set of 6 carbide tipped tools for 4-way toolpost	010 182
	Overhead pilot bar with guard	010 205
②	Stub boring bar, heavy type, with pilot	010 210
⑤	Toolholder, straight, plain	010 207
⑥	Toolholder, straight, adjustable	010 208
⑧	1 Set of 4 adaptor bushes	010 209
⑨	Taper shank adaptor sleeve	010 215
⑩	Floating reamer holder	010 216
⑪	Stub boring bar, heavy type, without pilot	010 211
⑫	Stub boring bar, light type, without pilot	010 212
⑬	Flanged toolholder, long	010 214
⑭	Flanged toolholder, short	010 213
⑰	Multiple turning head	010 230
⑱	Recessing tool, light type	010 228
	Tap and holder	010 232
㉑	Combination boring bar and cutter holder	010 239
㉒	Adaptor toolholder for 4-way toolpost	012 986

㉚

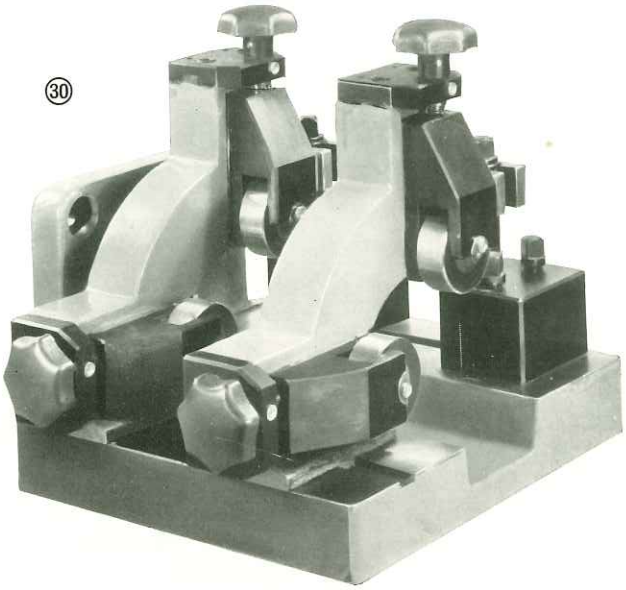

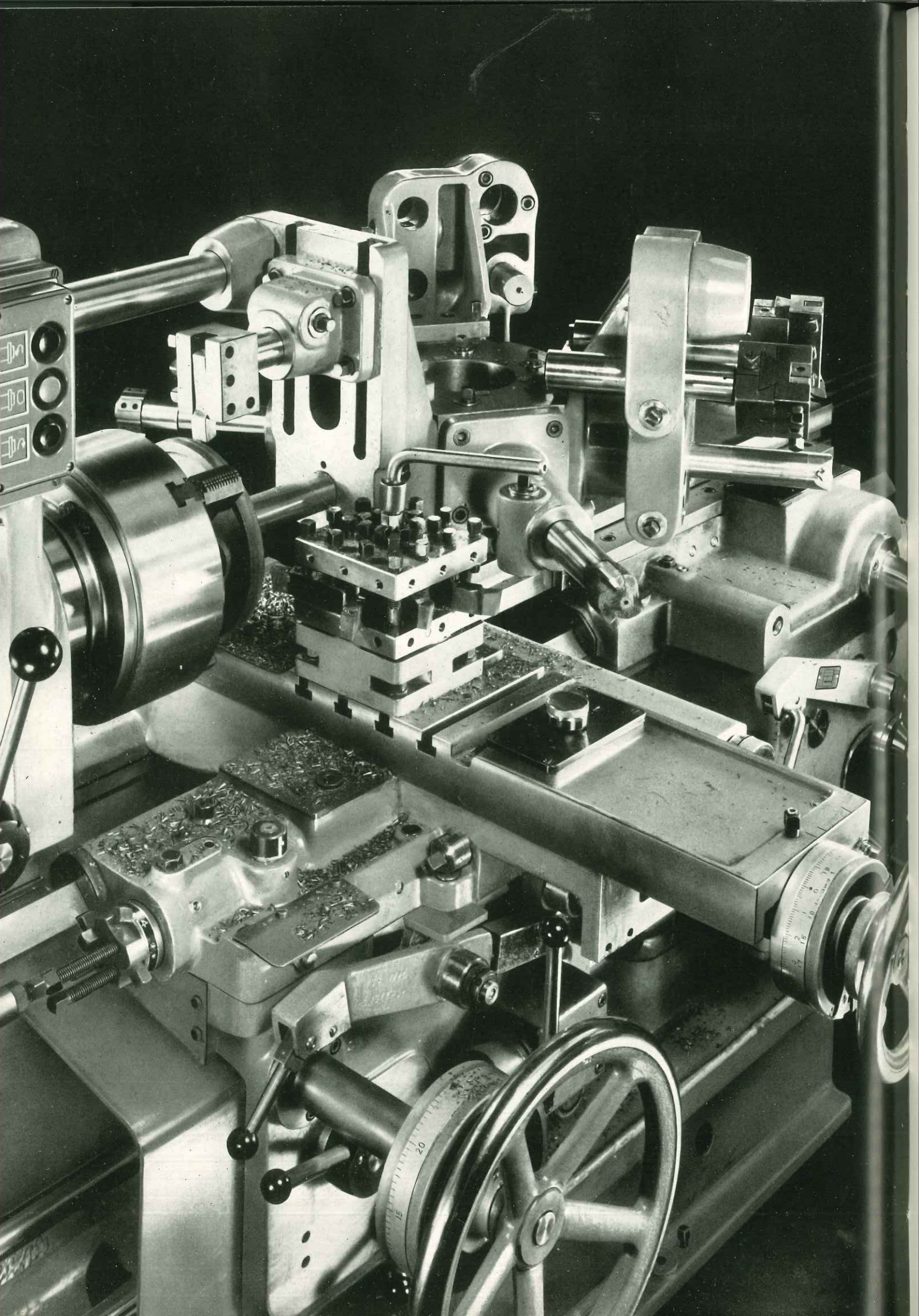

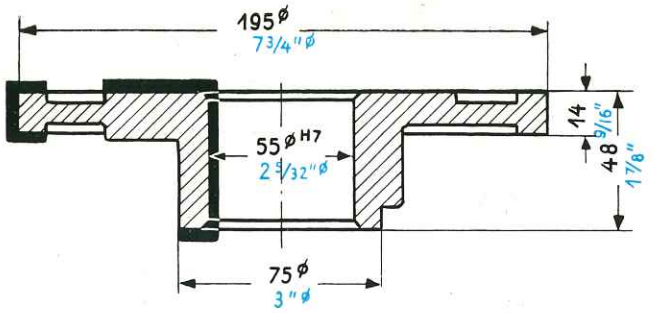

Eccentric hub

machined on VDF turret lathe RS 50
Material: grey cast iron
Tools: carbide tipped

Machining time: **tg = 7,3 min**

No.	Operation	D L	a s	n v
1	Clamping in power-operated chuck 1st setting			
2,1	Rough turning circumference and chamfering bore with turret	200 20 7 1/8 3/4	2 0,31 3/32 1/64	71 45 71 148
2,2	Rough facing with 4-way toolpost	200 16 7 1/8 5/8	3 0,31 1/8 1/64	71 45 71 148
3,1	Rough turning bore with turret	52 35 | 22 2 1/16 1 3/8 | 7/8	4 0,5 5/32 0.02	180 | 280 30 | 48 180 | 280 98 | 158
3,2	Rough facing with 4-way toolpost	30 | 80 | 52 25 | 15 1 1/4 | 3 1/8 | 2 1/16 1 | 5/8	2 0,31 3/32 1/64	180 | 280 72 | 45 180 | 280 236 | 148
4,1	Finish turning circumference and chamfering with turret	197 14 7 3/4 9/16	0,5 0,2 0.02 0.008	112 70 112 230
4,2	Finish facing with 4-way toolpost	197 18 7 3/4 3/4	0,5 0,2 0.02 0.008	112 70 112 230
5,1	Finish turning bore with turret	54,8 52 2 5/32 2 1/16	0,5 0,2 0,02 0.008	280 50 280 164
5,2	Finish facing with 4-way toolpost	130 | 54 40 5 1/8 | 2 1/8 1 5/8	0,5 0,2 0.02 0.008	280 112 | 50 280 367 | 164
6	2nd setting			
7,1	Chamfering with turret	195 | 55 — 7 5/8 | 2.165 —	— b. h. — b. h.	112 70 112 230
7,2	Facing with 4-way toolpost (2 cuts)	195 | 55 14 | 14 7 5/8 | 2.165 9/16 | 9/16	3 | 0,5 0,31 | 0,2 1/8 | 0,02 1/64 | 0,008	112 | 180 70 | 112 112 | 180 230 | 368
8	Finish turning rear end of bore with dial gauge control	55 55 2.165 2.165	0,1 0,2 0.004 0.008	450 80 450 262

D = diameter in "mm in."
L = cutting travel of tool in "mm in."
a = depth of cut in "mm in."
s = feed in "mm in." per revolution
n = spindle speed in "r.p.m. r.p.m."
v = cutting speed in "m.p.m. ft.p.m."

◀ *TOOLING SET-UP FOR THE MACHINING OF THE ECCENTRIC HUB*

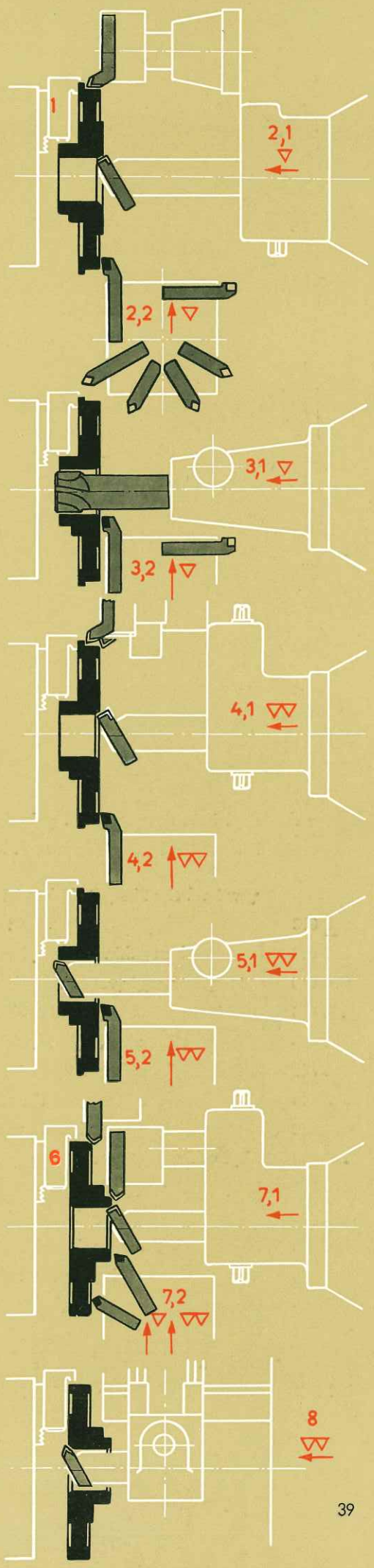

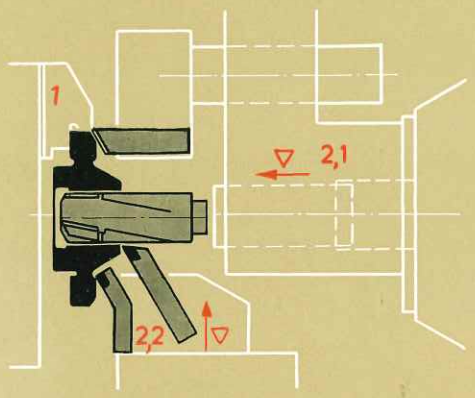

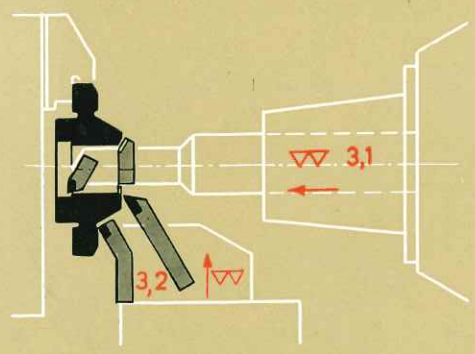

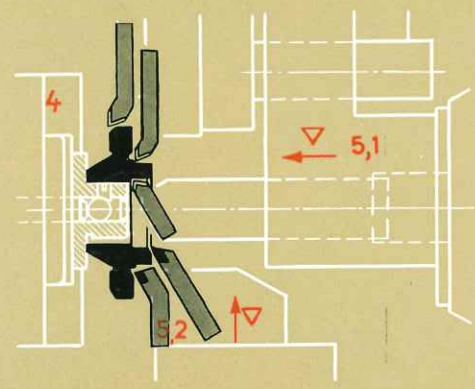

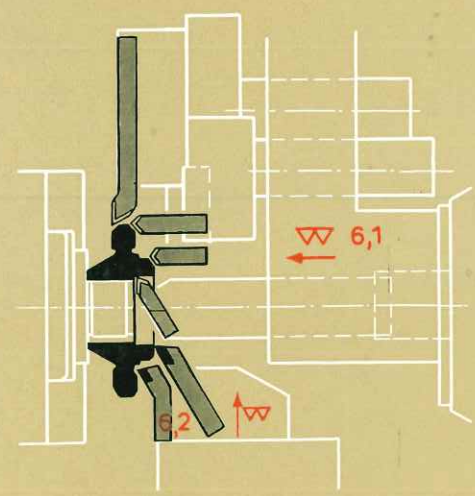

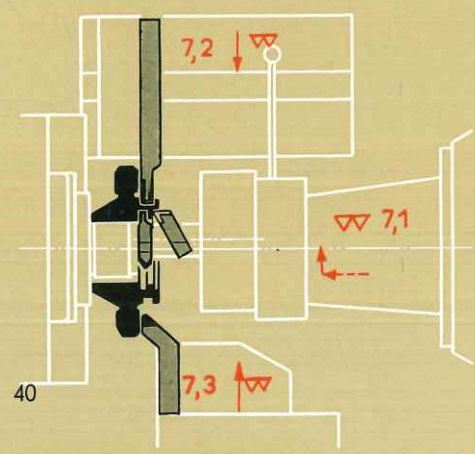

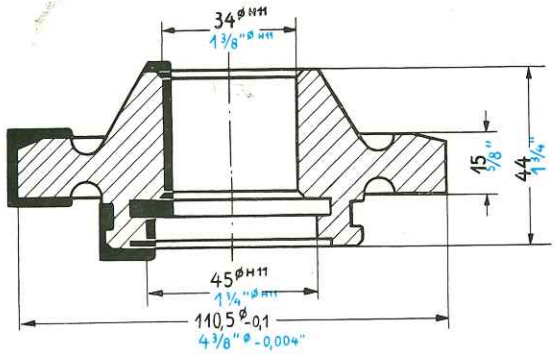

Gear blank

machined on VDF turret lathe RS 50
Material: nickel chrome steel
Tools: carbide tipped

Machining time: **tg = 6 min**

No.	Operation	D / L	a / s	n / v
1	Clamping in power-operated chuck 1st setting			
2,1	Chamfering bore, rough turning bore, and chamfering circumference with turret	33 | 114	3	280 | 140
		33 | 5	0,20 | 0,12	30 | 50
		1 5/16 | 4 1/2	1/8	280 | 140
		1 5/16 | 3/16	0.008 | 0.005	98 | 164
2,2	Rough facing with 4-way toolpost	100 | 45	2	280
		18	0,16	90 | 40
		3 15/16 | 1 3/4	3/32	280
		3/4	0.006	295 | 131
3,1	Finish turning and chamfering bore with turret	34	0,5	355
		38	0,2	40
		1 3/8	0.02	355
		1 1/2	0.008	131
3,2	Finish facing with 4-way toolpost	100 | 34	0,5	355
		10	0,12	112 | 40
		3 15/16 | 1 3/8	0.02	355
		3/8	0.005	367 | 131
4	2nd setting			
5,1	Rough turning bore and circumference with turret	34 | 114	6	140
		18	0,20	16 | 50
		1 3/8 | 4 1/2	1/4	140
		3/4	0.008	52 | 164
5,2	Rough facing with 4-way toolpost	114 | 83	2	140
		18	0.20	50 | 36
		4 1/2 | 3 1/4	3/32	140
		3/4	0.008	164 | 118
6,1	Finish turning bore and circumference, and chamfering with turret	45 | 110	1	355
		16	0,20	50 | 125
		1 3/4 | 4 5/16	3/64	355
		5/8	0.008	164 | 410
6,2	Finish facing with 4-way toolpost	110 | 83	1	355
		16	0,20	125 | 95
		4 5/16 | 3 1/4	3/64	355
		5/8	0.008	410 | 311
7,1	Chamfering and recessing with turret	53	4 | 1	224
		10	0,12 (b.h.)	38
		2 1/8	5/32 | 3/64	224
		3/8	0.005 (b.h.)	125
7,2	Recessing groove from rear	66	7	224
		5	0,1	48
		2 5/8	1/4	224
		3/16	0.005	158
7,3	Chamfering with 4-way toolpost	66	—	224
		—	b. h.	48
		2 5/8	—	224
		—	b. h.	158

D = diameter in "mm in."
L = cutting travel of tool in "mm in."
a = depth of cut in "mm in."
s = feed in "mm in." per revolution
n = spindle speed in "r.p.m. r.p.m."
v = cutting speed in "m.p.m. ft.p.m."

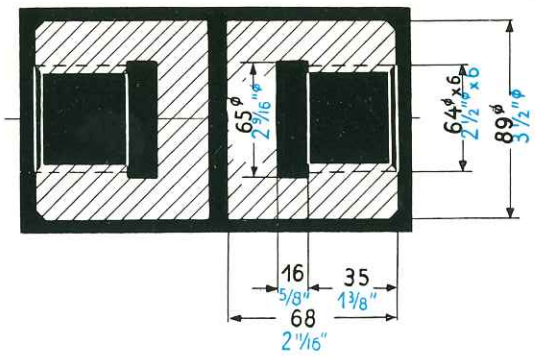

Special nut

machined on VDF turret lathe RS 50
Material: Free-cutting steel
Tools: carbide tipped
Drill: high-speed steel

Machining time: **tg = 8,4 min**
(for 2 special nuts)

No.	Operation	D / L	a / s	n / v
1	Clamping in power-operated chuck 1st setting			
2,1	rough turning circumference and rough boring with turret	95 | 56 72 3 3/4 | 2 7/32 2 7/8	3 0,4 1/8 0.016	180 56 | 31 180 184 | 102
2,2	rough facing with 4-way toolpost	95 | 56 22 3 3/4 | 2 7/32 7/8	3 0,25 1/8 0.01	180 56 | 31 180 184 | 102
3	recessing with turret	65 8+12 2 5/8 5/16+1/2	10 0,12 | 0,25 3/8 0.005 | 0.01	280 58 280 190
4,1	finish turning circumference and bore, and chamfering with turret	89 | 58 71 3 1/2 | 2 1/4 2 7/8	0,5 0,25 0.02 0.01	450 125 | 85 450 410 | 279
4,2	finish facing with 4-way toolpost	89 | 58 17 3 1/2 | 2 1/4 3/4	0,5 0,16 0.02 0.006	450 125 | 85 450 410 | 279
5	cutting thread with turret, 4 cuts	63,5 200 2 1/2 8	0,6 4,2 0.024 0.165	28 5,5 28 18
6	2nd setting			
7-10	see 2.1–5			
11	parting-off with rear toolpost	89 46 3 1/2 1 7/8	6 0,12 1/4 0.005	180 50 180 164
12	finish turning face and radius with 4-way toolpost	89 47 3 1/2 1 7/8	0,5 0,25 0.02 0.01	450 125 450 410
13	3rd setting			
14	finish turning face and radius	89 47 3 1/2 1 7/8	0,5 0,25 0.02 0.01	450 125 450 410

D = diameter in "mm in."
L = cutting travel of tool in "mm in."
a = depth of cut in "mm in."
s = feed in "mm in." per revolution
n = spindle speed in "r.p.m. r.p.m."
v = cutting speed in "m.p.m. ft.p.m."

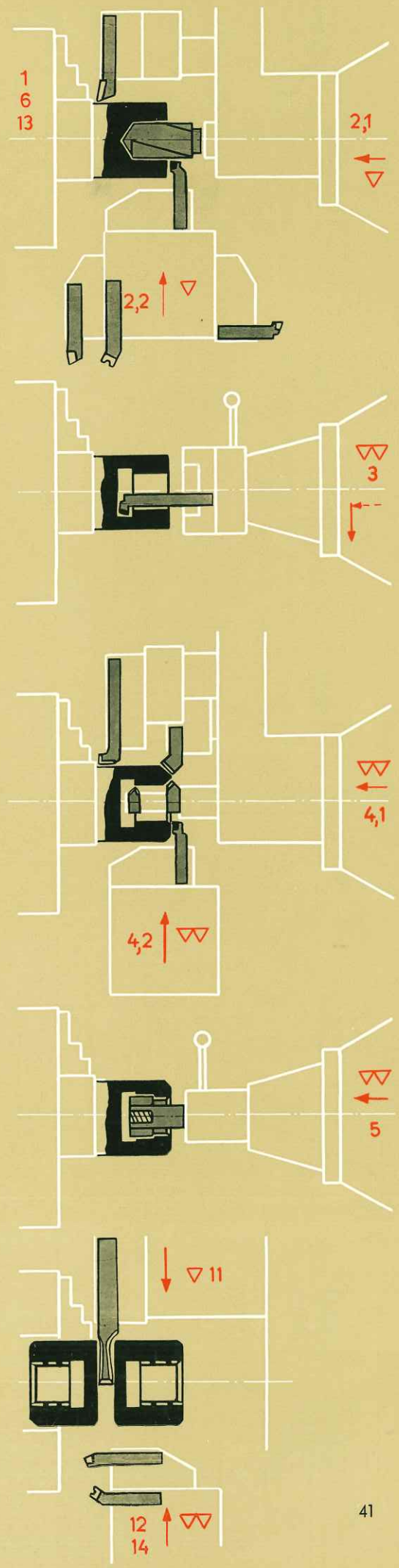

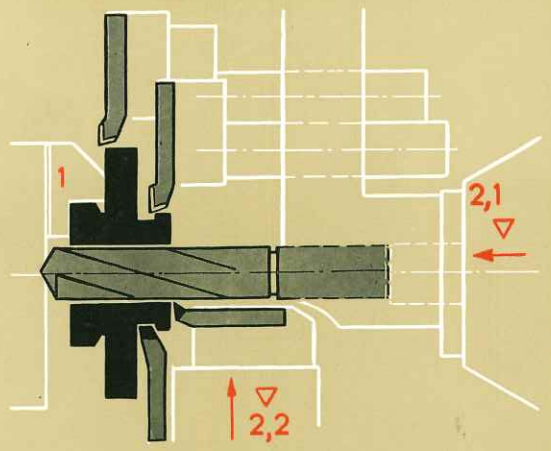

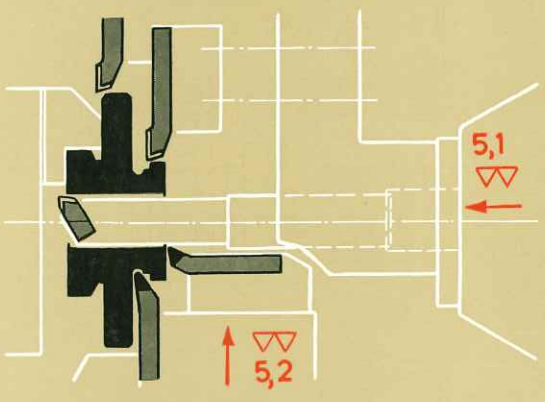

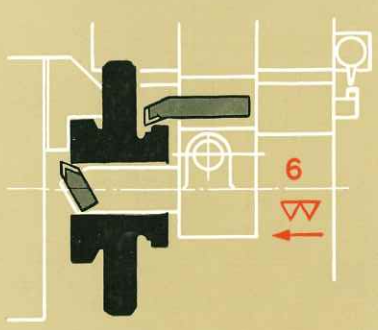

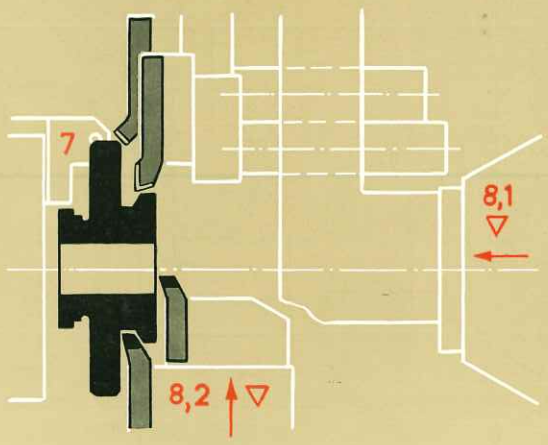

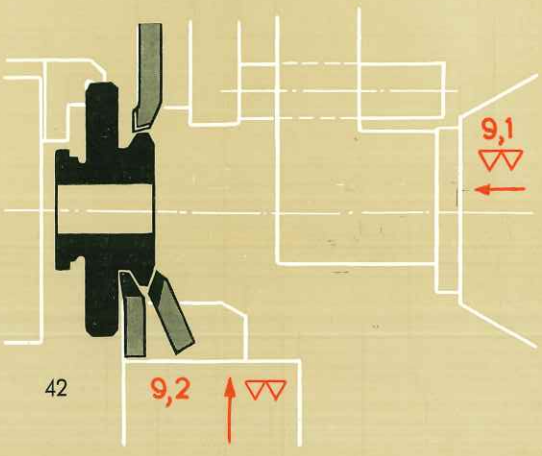

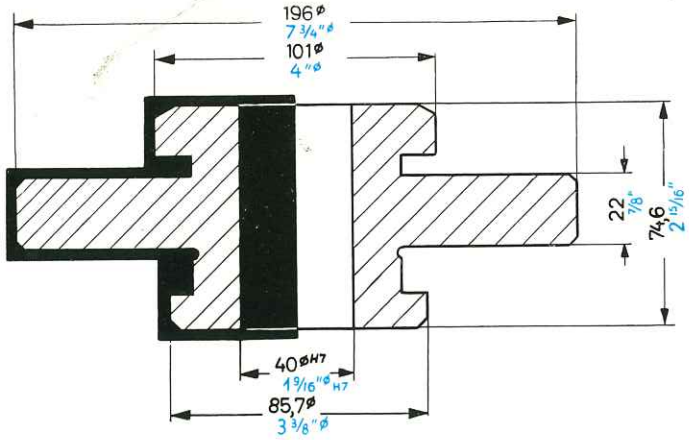

Clutch disc

machined on VDF turret lathe RS 50
Material: grey cast iron
Tools: carbide tipped
Machining allowance: + 2 mm on each surface

Machining time: **tg = 14,5 min**

No.	Operation	D / L	a / s	n / v
1	Clamping in power-operated chuck 1st setting			
2,1	rough turning hub and circumference with turret, rough boring	196 | 36 76 7 3/4 | 1 3/8 3	20 0,4 3/4 0.015	71 45 71 148
2,2	rough facing and recessing with 4-way toolpost	196 | 75 60 7 3/4 | 3 2 3/8	4 0,4 5/32 0.015	71 45 71 148
3	recessing 75 mm dia. with 4-way toolpost	86 | 75 6 3 3/8 | 3 1/4	7 0,25 5/16 0.01	180 47 180 154
4	chamfering with 4-way toolpost	196 | 86 — 7 3/4 | 3 3/8 —	— b. h. — b. h.	112 65 112 213
5,1	finish turning hub and circumference with turret, finish boring	196 | 40 76 7 3/4 | 1 9/16 3	1 0,25 3/64 0.01	112 70 112 230
5,2	finish facing with 4-way toolpost	196 | 68 64 7 3/4 | 2 5/8 2 1/2	1 0,25 3/64 0.01	112 70 112 230
6	finish turning rear of bore and hub with dial indicator control	85,7 | 40 75 3 3/8 | 1 9/16 3	1 0,16 3/64 0.006	280 75 280 246
7	2nd setting			
8,1	rough turning and chamfering hub with turret	196 | 85 20 7 3/4 | 3 3/8 3/4	2 0,4 5/32 0.015	71 45 71 148
8,2	rough facing with 4-way toolpost	196 | 85 56 7 3/4 | 3 3/8 2 1/4	4 0,4 5/32 0.015	71 45 71 148
9,1	finish turning hub with turret	85 20 3 3/8 3/4	1 0,25 3/64 0.01	180 50 180 164
9,2	finish facing and chamfering with 4-way toolpost	100 | 85 9 4 | 3 3/8 3/8	1 0,25 3/64 0.01	180 60 180 197
10	finish facing rear and seating with dial indicator control	196 | 85 56 7 3/4 | 3 3/8 2 1/4	1 0,31 b. h. 3/64 0.015 b. h.	112 0 112 230

D = diameter in "mm in."
L = cutting travel of tool in "mm in."
a = depth of cut in "mm in."
s = feed in "mm in." per revolution
n = spindle speed in "r.p.m. r.p.m."
v = cutting speed in "m.p.m. ft.p.m."

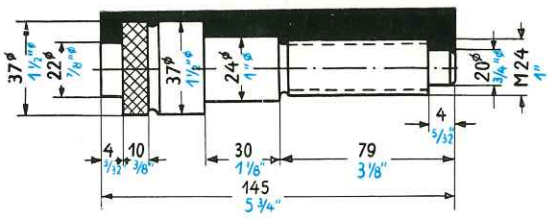

Stop screw

machined on VDF turret lathe RS 50
Material: free-cutting steel
Tools: carbide tipped

Machining time: **tg = 4,5 min**

No.	Operation	D / L	a / s	n / v
1	Feeding in stock against stop, and clamping			
2	turning with roller box tool in turret (3 tools simultaneously in action)	40	9	450
		150	0,25	56
		1 5/8	3/8	450
		6	0,01	184
3,1	facing, recessing and chamfering with 4-way toolpost	37	7	280
		8	0,16	32
		1 1/2	1/4	280
		5/16	0,006	105
3,2	bevelling and centring with turret	23	—	280
		8	b. h.	20
		7/8	—	280
		5/16	b. h.	66
4	chasing thread with turret	24	—	450
		75	1,5	35
		1	—	450
		3	1/16	115
5	recessing with 4-way toolpost	37	9	180
		9	0,16	22
		1 1/2	3/8	180
		3/8	0,006	72
6	knurling with 4-way toolpost	37	—	280
		—		35
		1 1/2	—	280
		—	—	115
7	parting-off at rear and chamfering	22	5	450
		13	0,16	28
		7/8	3/16	450
		1/2	0,006	92

D = diameter in "mmin- "
L = cutting travel of tool in "mm in."
a = depth of cut in "mm in."
s = feed in "mm in." per revolution
n = spindle speed in "r.p.m. r.p.m."
v = cutting speed in "m.p.m. ft.p.m."

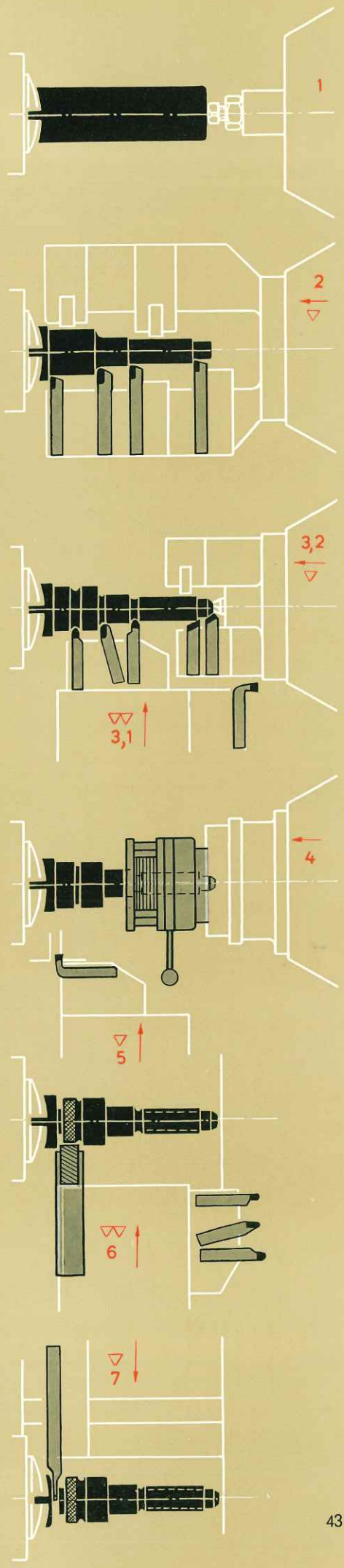

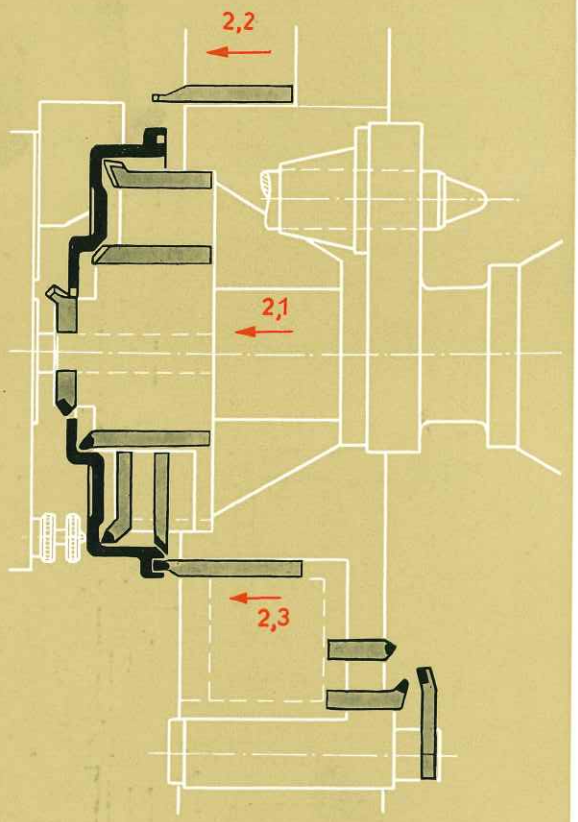

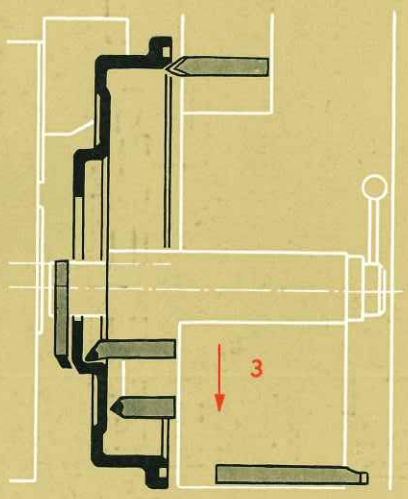

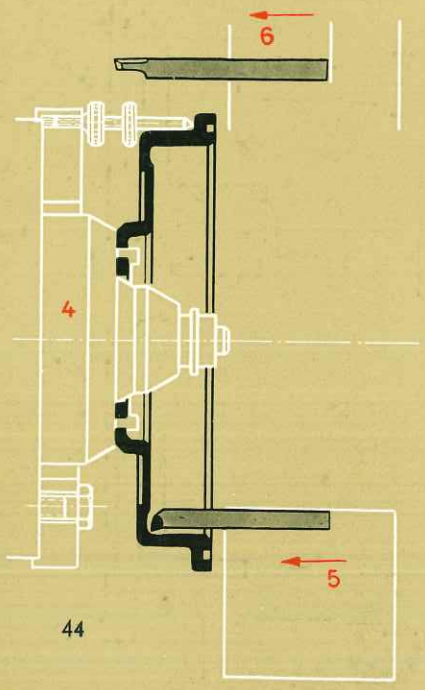

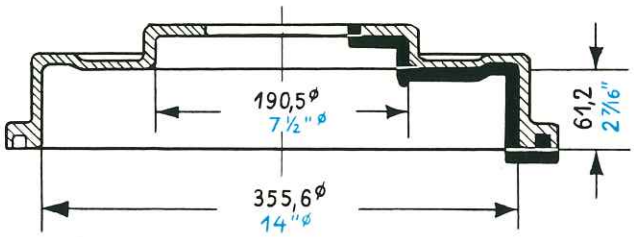

Brake drum

machined on VDF turret lathe RS 80
Material: grey cast iron
Tools: carbide tipped

Machining time: **tg = 15,3 min**

No.	Operation	D / L	a / s	n / v
1	Chucking and setting 1st setting			
2,1	turning bores with turret	115 | 355 67 4½ | 14 2⅝	2 0,4 3/32 0.016	35,5 13 | 39 35.5 43 | 128
2,2	roughing 7 mm wide groove with 4-way toolpost	379,2 13 14 15/16 ½	— 0,25 — 0.01	35,5 42 35.5 138
2,3	finishing groove with 4-way toolpost	398,5 13 15¾ ½	— 0,25 — 0.01	35,5 44 35.5 144
3	facing with 4-way toolpost	115 | 408 40 4½ | 16 1/16 1⅝	3 0,315 ⅛ 1/64	35,5 13 | 46 35.5 42 | 151
4	chucking and setting 2nd setting			
5	finish turning 355.6 mm dia. + 0.1 mm with 4-way toolpost	355,6 61 14 2 1/16	0,2 0,2 0.008 0.008	90 100 90 328
6	finish turning 190.5 mm dia. + 0.04 mm — 0.02 mm at rear	190,5 17 7½ ½	0,2 0,2 0.008 0.008	140 84 140 276

D = diameter in "mm in."
L = cutting travel of tool in "mm in."
a = depth of cut in "mm in."
s = feed in "mm in." per revolution
n = spindle speed in "r.p.m. r.p.m."
v = cutting speed in "m.p.m. ft.p.m."

MACHINING A BRAKE DRUM ON A VDF TURRET LATHE MODEL RS 80 ▶

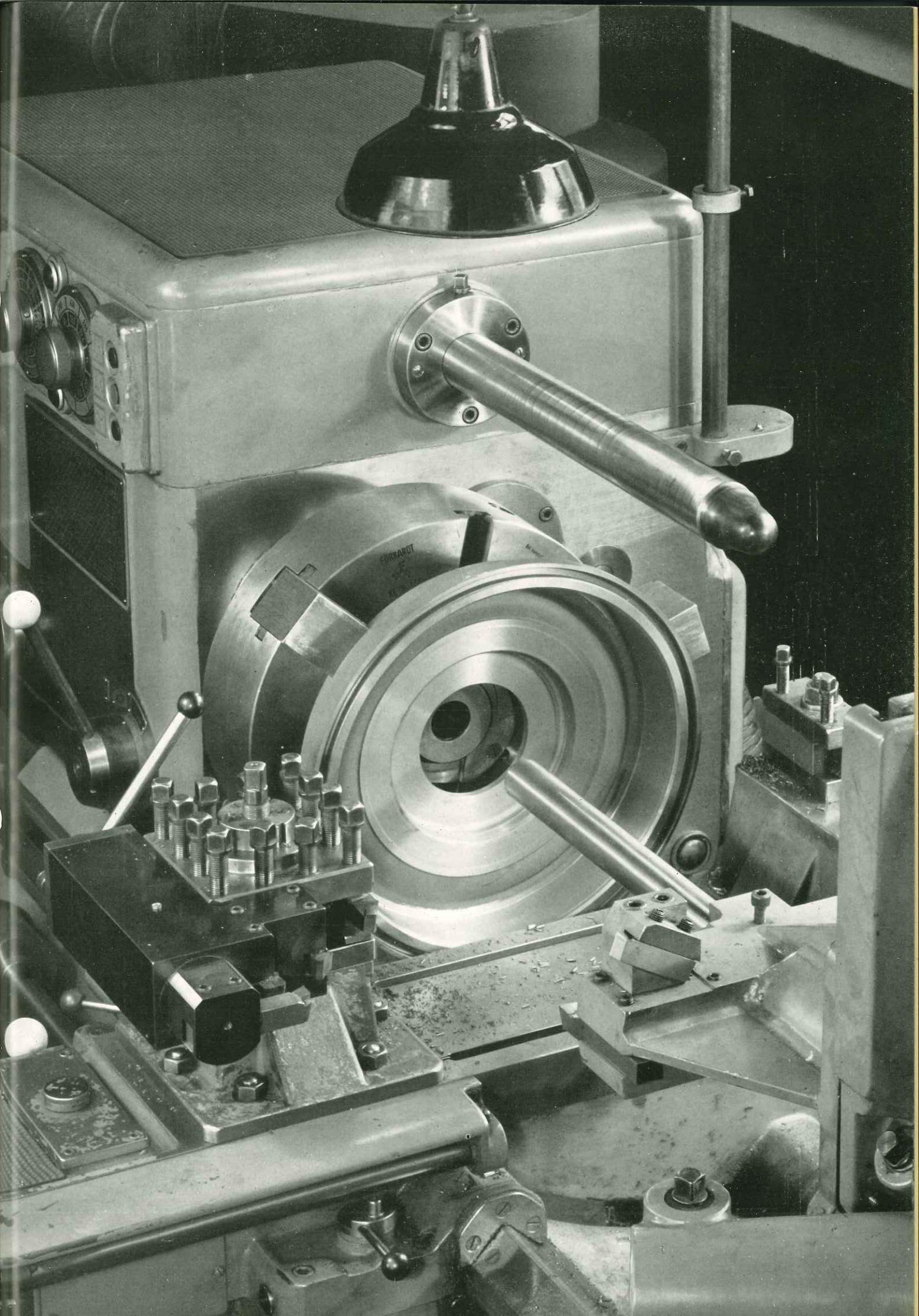
FORWARDT

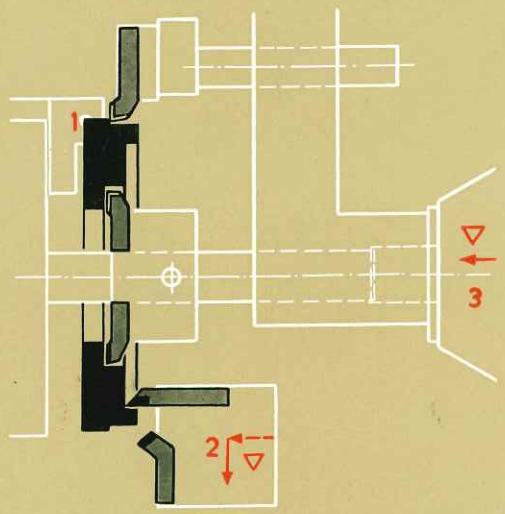

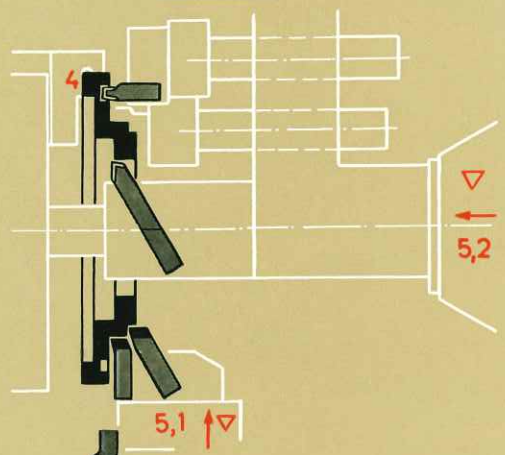

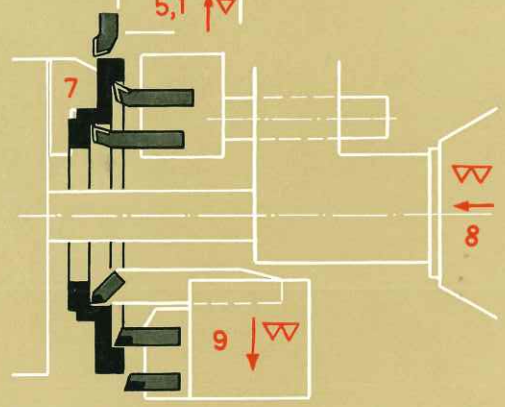

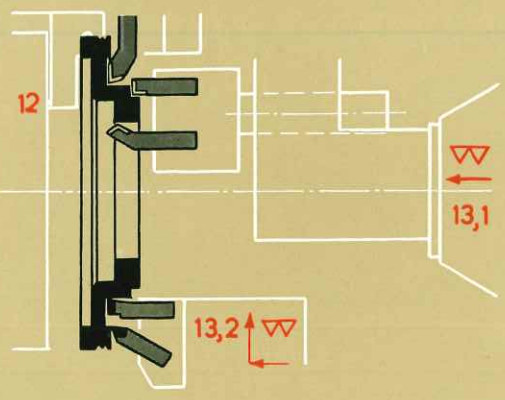

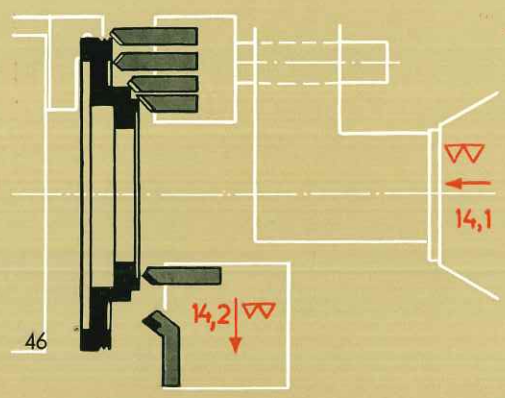

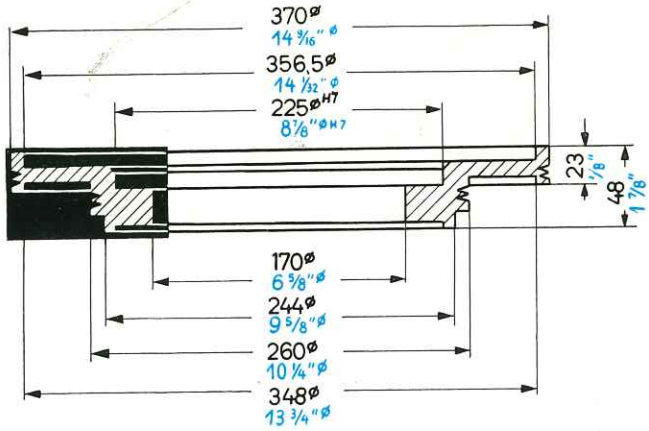

Flange

machined on VDF turret lathe RS 80
Material: sheet metal, oxy-acetylene cut and annealed
Tools: carbide tipped

Machining time: **tg = 52 min**

No.	Operation	D / L	a / s	n / v
1	Clamping in power-operated chuck 1st setting			
2	rough facing with 4-way toolpost	160 | 350 95 6 1/4 | 13 3/4 3 3/4	9 | 2 0,31 3/8 | 3/32 0.015	90 45 | 100 90 148 | 328
3	rough turning circumference and bore with turret	380 | 220 15 | 30 14 15/16 | 8 5/8 5/8 | 1 3/16	4 | 30 0,4 | 0,2 5/32 | 1 3/16 0.015 | 0.008	90 110 | 60 90 361 | 197
4	2nd setting			
5,1	rough facing with 4-way toolpost, 3 cuts	380 | 246 110 | 120 14 15/16 | 8 5/8 4 3/8 | 4 3/4	15 0,5 | 0,31 5/8 0.02 | 0.012	90 | 56 110 | 40 90 | 56 361 | 131
5,2	rough turning bore and recessing with turret	168 | 348 3,5 6 5/8 | 13 3/4 1/8	18 0,2 3/4 0.008	56 30 | 63 56 98 | 207
6	rough facing with 4-way toolpost	324 | 168 30 12 3/4 | 6 5/8 1 3/16	8 0,31 5/16 0.012	90 100 | 45 90 328 | 148
7	3rd setting			
8	finish longitudinal turning with turret	372 | 224 45 14 5/8 | 8 3/4 1 3/4	1 0,2 3/64 0.008	180 210 | 125 180 689 | 410
9	finish facing with 4-way toolpost	168 | 372 60 6 5/8 | 14 5/8 2 3/8	1 0,2 3/64 0.008	180 210 | 95 180 689 | 312
10,1	chamfering with turret	370 — 14 9/16 —	— b. h. — b. h.	90 100 90 328
10,2	recessing with 4-way toolpost	370 7 14 9/16 1/4	10 0,12 3/8 0.005	90 100 90 328
11	finish turning rear with dial indicator control	225 28 8 7/8 1 1/8	0,5 0,16 0.02 0.006	224 160 224 525
12	4th setting			
13,1	finish longitudinal turning with turret	260 26 10 1/4 1	1 0,2 3/64 0.008	180 140 180 460
13,2	finish facing with 4-way toolpost	370 | 260 30 14 9/16 | 10 1/4 1 1/4	1 0,2 3/64 0.008	180 200 | 140 180 656 | 459
14,1	chamfering with turret	370 — 14 9/16 —	1 b. h. 3/64 b. h.	224 260 224 853
14,2	finish facing with 4-way toolpost	170 | 225 28 6 5/8 | 8 7/8 1 1/8	1 0,2 3/64 0.008	224 115 | 160 224 377 | 525
15	recessing from rear	260 7 10 1/4 5/16	10 0,12 3/8 0.005	90 71 90 233

D = diameter in "mm in."
L = cutting travel of tool in "mm in."
a = depth of cut in "mm in."
s = feed in "mm in." per revolution
n = spindle speed in "r.p.m. r.p.m."
v = cutting speed in "m.p.m. ft.p.m."

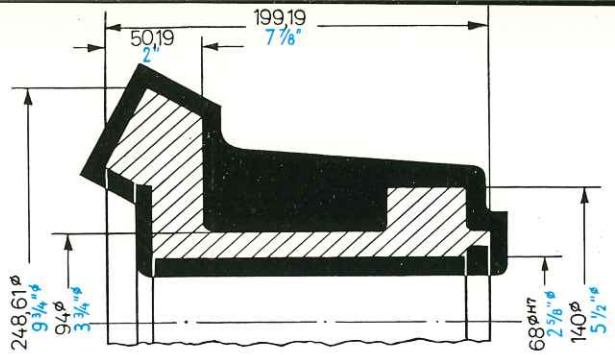

Bevel gear blank

machined on VDF turret lathe RS 80
Material: drop forged steel
Tools: carbide tipped

Machining time: **tg = 37 min**

No.	Operation	D / L	a / s	n / v
1	Clamping in power-operated chuck 1st setting			
2,1	turning hub and bore with turret	140 | 67 30 | 145 5 1/2 | 2 5/8 1 1/4 | 5 3/4	15 0,31 5/8 0.012	90 | 140 70 | 28 90 | 140 230 | 92
2,2	facing with 4-way toolpost	212 30 8 3/8 1 1/4	7 0,31 5/16 0.012	90 60 90 197
3	2nd setting			
4	facing front surface	64 | 145 41 2 1/2 | 5 3/4 1 5/8	2 0,25 3/32 0.01	180 40 | 80 180 131 | 262
5,1	turning crest face	250 | 212 — 9 7/8 | 8 3/8 —	2 0,25 3/32 0.01	90 70 90 230
5,2	turning taper face	250 | 172 55 9 7/8 | 6 3/4 2 1/4	2 0,25 3/32 0.01	90 70 | 50 90 230 | 164
6	3rd setting			
7	recessing from rear, 2 cuts	144 | 94 24 5 3/4 | 3 3/4 1	8 0,2 5/16 0.008	140 64 | 42 140 210 | 138
8	turning 94 mm dia. recess with 4-way toolpost, 3 cuts	144 | 94 60 5 3/4 | 3 3/4 2 3/8	8 0,31 5/16 0.012	140 64 140 210
9,1	turning 67.5 and 85.5 mm dia. bore with turret	67,5 178 2 5/8 7	2 0,31 3/32 0.012	140 30 140 98
9,2	facing and radiusing front surface with 4-way toolpost	215 | 94 60 8 1/2 | 3 3/4 2 3/8	2 0,2 3/32 0.008	140 95 | 42 140 312 | 138
10	turning 140 mm dia. with 4-way toolpost	140 64 5 1/2 2 1/2	2 0,31 3/32 0.012	180 80 180 262
11	facing front surface with 4-way toolpost	140 | 86 28 5 1/2 | 3 3/8 1 1/8	2 0,31 3/32 0.012	180 80 | 53 180 262 | 174
12	turning 86 mm dia, bore and front face with 4-way toolpost	86 | 68 20 3 3/8 | 2 5/8 3/4	0,3 0,2 0.012 0.008	224 75 224 246
13	turning 67.9 mm dia. bore with turret	67,9 166 2 5/8 6 1/2	0,2 0,2 0.008 0.008	355 76 355 249
14	reaming 68 mm dia. H 7 bore with turret	68 166 2 5/8 6 1/2	0,1 2 0.004 3/32	35,5 7,5 35.5 24
15	Clamping in power-operated chuck			
16	turning taper face	248 | 172 47 9 3/4 | 6 3/4 1 7/8	2 0,2 3/32 0.008	90 70 | 50 90 230 | 164
17,1	turning crest face	248 | 212 — 9 3/4 | 8 3/8 —	2 0,2 3/32 0.008	90 70 90 230
17,2	facing front surface	68 | 150 41 2 5/8 | 5 7/8 1 5/8	2 0,2 3/32 0.008	140 30 | 66 140 98 | 217

D = diameter in "mm in."
L = cutting travel of tool in "mm in."
a = depth of cut in "mm in."
s = feed in "mm in." per revolution
n = spindle speed in "r.p.m. r.p.m."
v = cutting speed in "m.p.m. ft.p.m."

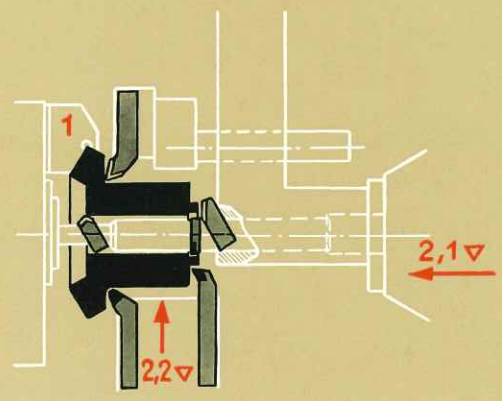

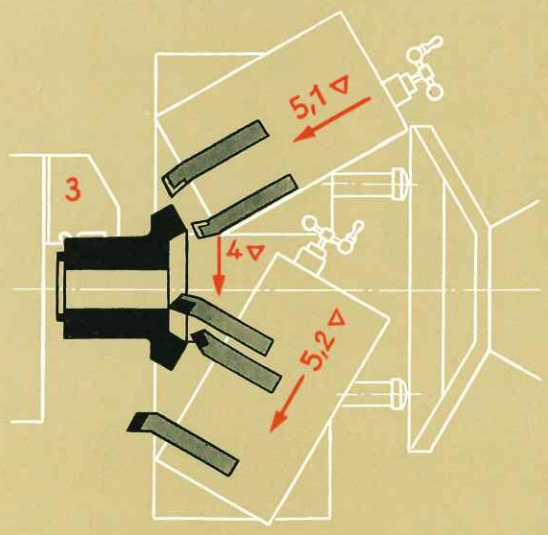

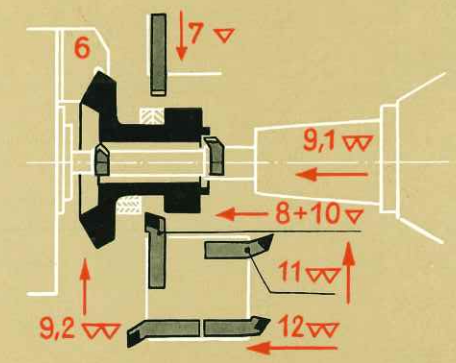

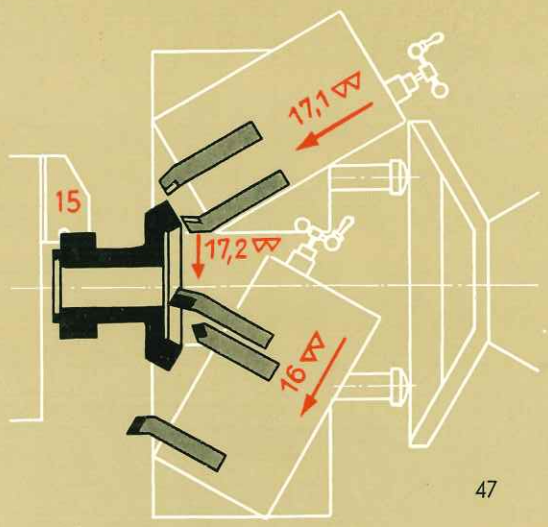

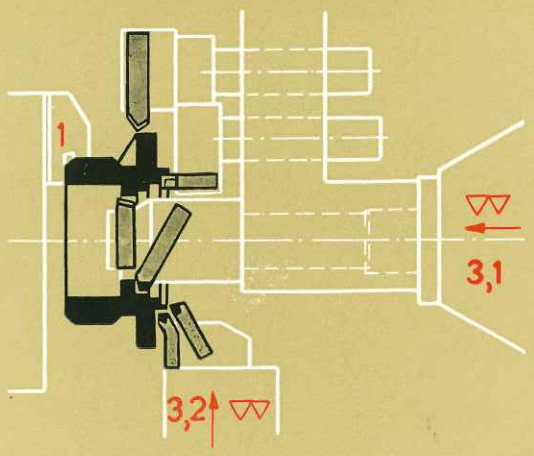

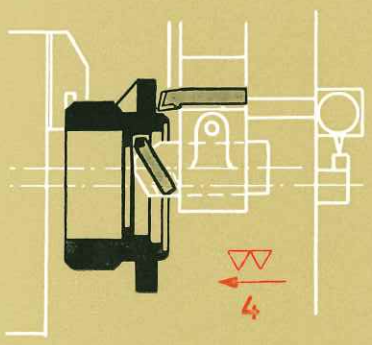

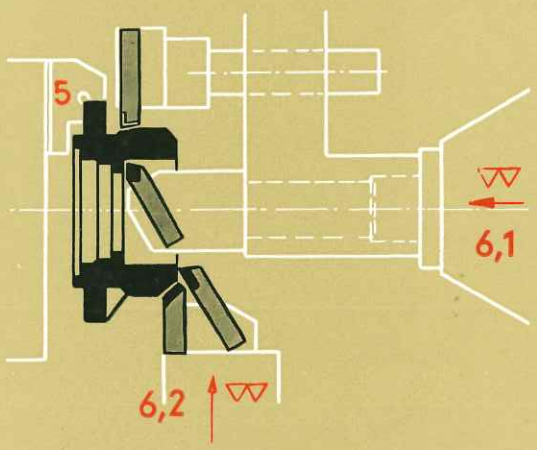

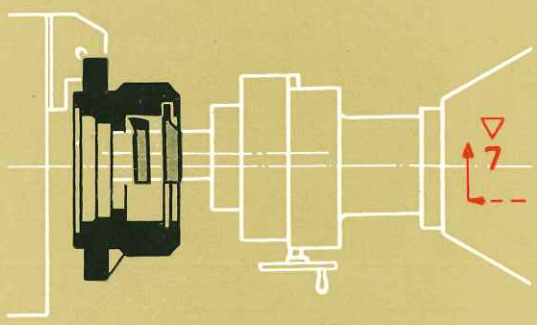

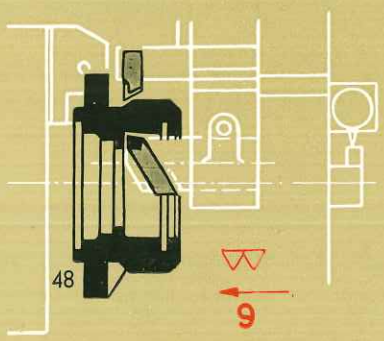

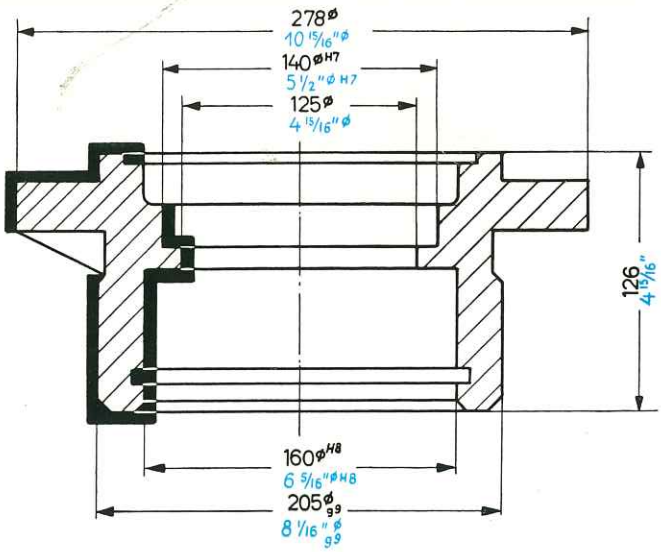

Cover

machined on VDF turret lathe RS 80
Material: grey cast iron
Tools: carbide tipped

Machining time: **tg = 14 min**

No.	Operation	D / L	a / s	n / v
1	Clamping in power-operated chuck 1st setting			
2,1	rough turning circumference and bore with turret	285 | 124 28 11 7/32 | 4 7/8 1 1/8	4 | 10 0,31 5/32 | 3/8 0.012	56 50 | 22 56 164 | 72
2,2	rough facing with 4-way toolpost	285 | 180 40 11 7/32 | 7 1/8 1 5/8	4 | 12 0,5 5/32 | 1/2 0.02	56 50 | 32 56 164 | 105
3,1	finish turning circumference and bore with turret	201 | 139 25 7 15/16 | 5 1/2 1	0,5 0,25 0.02 0.01	140 90 | 63 140 295 | 207
3,2	finish facing with 4-way toolpost	201 | 180 40 7 15/16 | 7 1/8 1 5/8	0,5 0,4 0.02 0.016	140 90 | 80 140 295 | 262
4	finish turning seatings at rear with dial indicator control	200 | 140 17 7 7/8 | 5 1/2 5/8	0,2 0,2 0.008 0.008	140 90 | 63 140 295 | 207
5	2nd setting			
6,1	rough turning bore and circumference with turret	210 | 155 80 8 1/4 | 6 1/8 3 1/8	4 | 4 0,4 5/32 | 5/32 0.016	90 56 | 45 90 184 | 148
6,2	facing and chamfering with 4-way toolpost	205 | 158 22 8 1/16 | 6 1/4 7/8	4 0,25 5/32 0.01	90 55 | 46 90 180 | 151
7	recessing and finish facing with turret	165 14 | 4 6 1/2 9/16 | 5/32	4,5 0,4 | 0,16 3/16 0.006	140 75 140 246
8,1	finish turning circumference and bore, and chamfering with turret	206 | 159 75 8 1/8 | 6 1/4 3	0,5 0,4 0.02 0.016	140 90 | 71 140 295 | 233
8,2	finish facing and chamfering with 4-way toolpost	206 18 8 1/8 3/4	0,5 0,4 0.02 0.016	140 90 140 295
9	finish turning seatings at rear with dial indicator control	205 | 160 78 8 1/16 | 6 5/16 3 1/8	0,2 0,25 0.008 0.01	140 90 | 71 140 295 | 233

D = diameter in "mm in. "
L = cutting travel of tool in "mm in. "
a = depth of cut in "mm in. "
s = feed in "mm in. " per revolution
n = spindle speed in "r.p.m. r.p.m. "
v = cutting speed in "m.p.m. ft.p.m. "

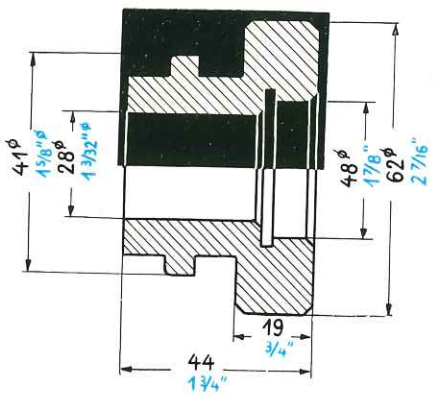

Clutch member

machined on VDF turret lathe RS 80
Material: case-hardening steel, 65 mm dia. bar stock
Tools: carbide tipped
Drill: high-speed steel

Machining time: **tg = 6 min**

No.	Operation	D / L	a / s	n / v
1	Feeding in bar stock and clamping			
2,1	rough turning bore and circumference with turret	25 | 65	12,5 | 2	224
		58	0,25	18 | 45
		1 | 2 1/2	1/2 | 3/32	224
		2 1/4	0.01	59 | 148
2,2	rough facing and recessing with 4-way toolpost	65 | 25	2	224
		25	0,16	45 | 18
		2 1/2 | 1	3/32	224
		1	0.006	148 | 59
3,1	turning bore with turret	35	8	224
		14	0,2	25
		1 3/8	5/16	224
		9/16	0.008	82
3,2	recessing and chamfering with 4-way toolpost	60	20	224
		12	0,12	45
		2 3/8	3/4	224
		1/2	0.005	148
4,1	finish turning circumference and bore with turret	27 | 60	1	355
		40	0,25	30 | 70
		1 1/16 | 2 3/8	3/64	355
		1 9/16	0.01	98 | 230
4,2	finish facing with 4-way toolpost, recessing	60	5	355
		12	0,25 b. h.	70
		2 3/8	3/16	355
		1/2	0.01 b. h.	230
5	recessing with turret	45	4	355
		6	b. h.	50
		1 3/4	5/32	355
		1/4	b. h.	164
6,1	chamfering with turret	35	—	355
		—	0,16	40
		1 3/8	—	355
		—	0.006	131
6,2	chamfering with 4-way toolpost	50	—	355
		—	b. h.	56
		2	—	355
		—	b. h.	184
7	parting-off from rear	40	5	355
		12	0,12	45
		1 9/16	3/16	355
		1/2	0.005	148

D = diameter in "mm in."
L = cutting travel of tool in "mm in."
a = depth of cut in "mm in."
s = feed in "mm in." per revolution
n = spindle speed in "r.p.m. r.p.m."
v = cutting speed in "m.p.m. ft.p.m."

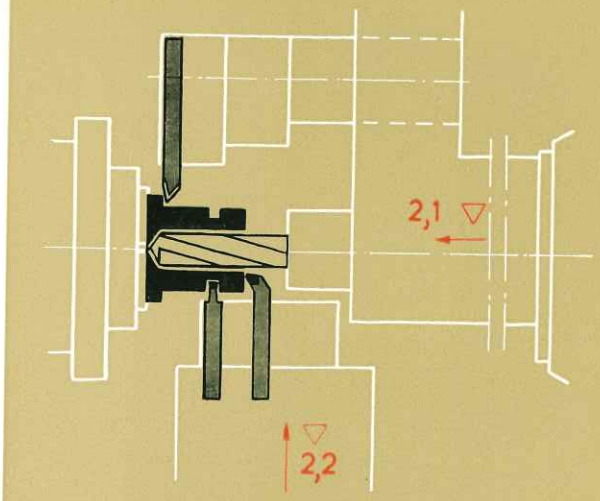

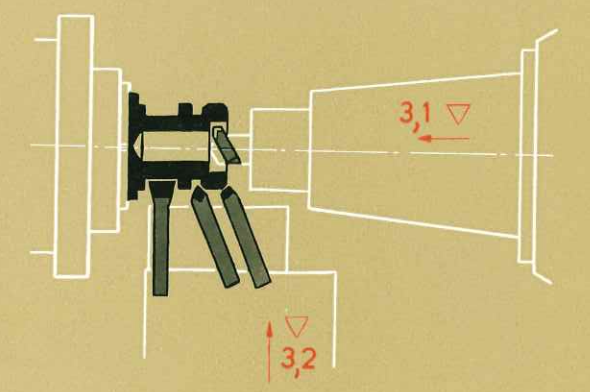

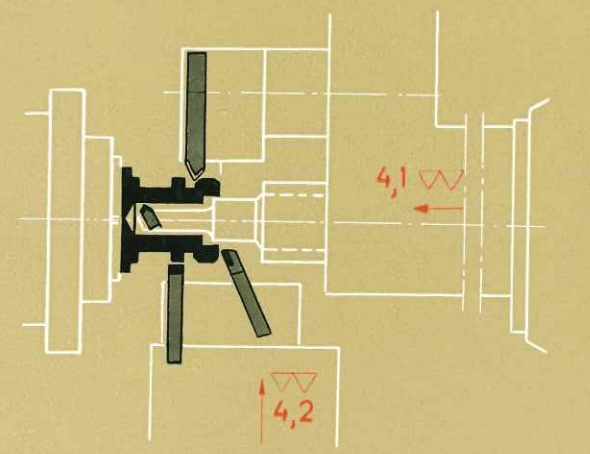

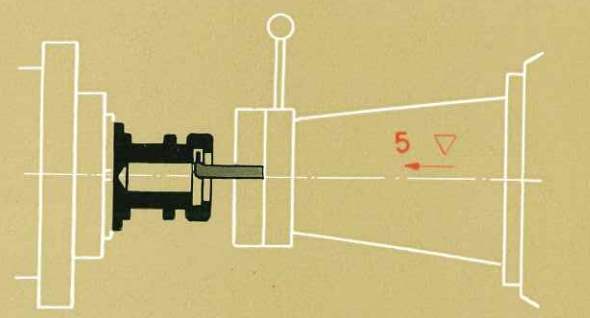

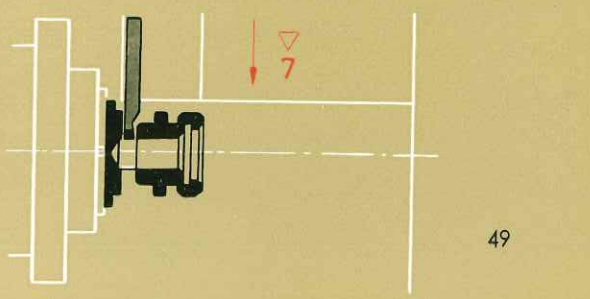

It is often not easy to decide which particular machine tool is the most suitable for one or several machining operations. Careful consideration must be given to quite a variety of factors, such as shape of the workpieces, accuracy and finish required, output, previous floor-to-floor time, floor space available, cost of the machine, etc. It is only after due study of these factors that a decision can be made whether the work calls for a centre lathe, a copying lathe, a turret lathe, or perhaps even an automatic.

We have been manufacturing these machine tools for many years, and they can be found all over the world, both in large industrial plants as well as small workshops. The wide experience which we have gained will also be to your benefit, and our experts will be pleased to give any required guidance, entirely without obligation on your part.

Our After-Sales Service with the distinctive blue VDF vans carrying all required tools and the most important spare parts is quickly on the spot to give assistance. In addition, our agents both in Germany and abroad will be pleased to provide guidance and help at all times.

RBECK
VDF-DIENST
HEIDENREICH & HARBECK
HAMBURG
4 km
Radfahren verboten
B H 31-5757
B H 31-5756

Our manufacturing programme

VDF Standard Lathes · VDF Turret Lathes
VDF Copying Lathes · VDF Deep Hole Boring Machines
Openside and Double Standard Planing Machines
Single-spindle Automatics · Turret Lathes
Crankshaft Lathes · Special-purpose Machines
Sturm Infinitely Variable Oil Drive Units

GEBR. BOEHRINGER GMBH. · GÖPPINGEN

VDF Copying Lathes · VDF Deep Hole Boring Machines
VDF Standard Lathes · VDF Turret Lathes
"Monocop" Copying Lathe
Automatic Bevel Gear Generators
Gears

HEIDENREICH & HARBECK · HAMBURG

VDF Standard Lathes
VDF Copying Lathes
Centre Lathes up to 79 in. turning diameter
Tube Turning Lathes · Special purpose Lathes

H. WOHLENBERG K.-G., HANNOVER

For turret lathe operations on workpieces wich exceed the capacity of VDF turret Lathes RS 50 to RS 100 we recommend:

VDF Special Lathes W 40 R and W 45 R with turret slide made by H. Wohlenberg K. G., Hannover

Turret Lathes R 26, RH 26 and RH 30
made by Gebr. Boehringer GmbH., Göppingen

Details are available on request.

Published and designed by
VEREINIGTE DREHBANK-FABRIKEN
Photographs by Friedrich Klotz, Göppingen
Ralph Kleinhempel, Hamburg
Art work by Werner Mahlert, Stuttgart
Blocks by Malte Behrndt, Stuttgart
Printed by Jungmann GmbH., Göppingen
English translation by W. H. Ballin, London

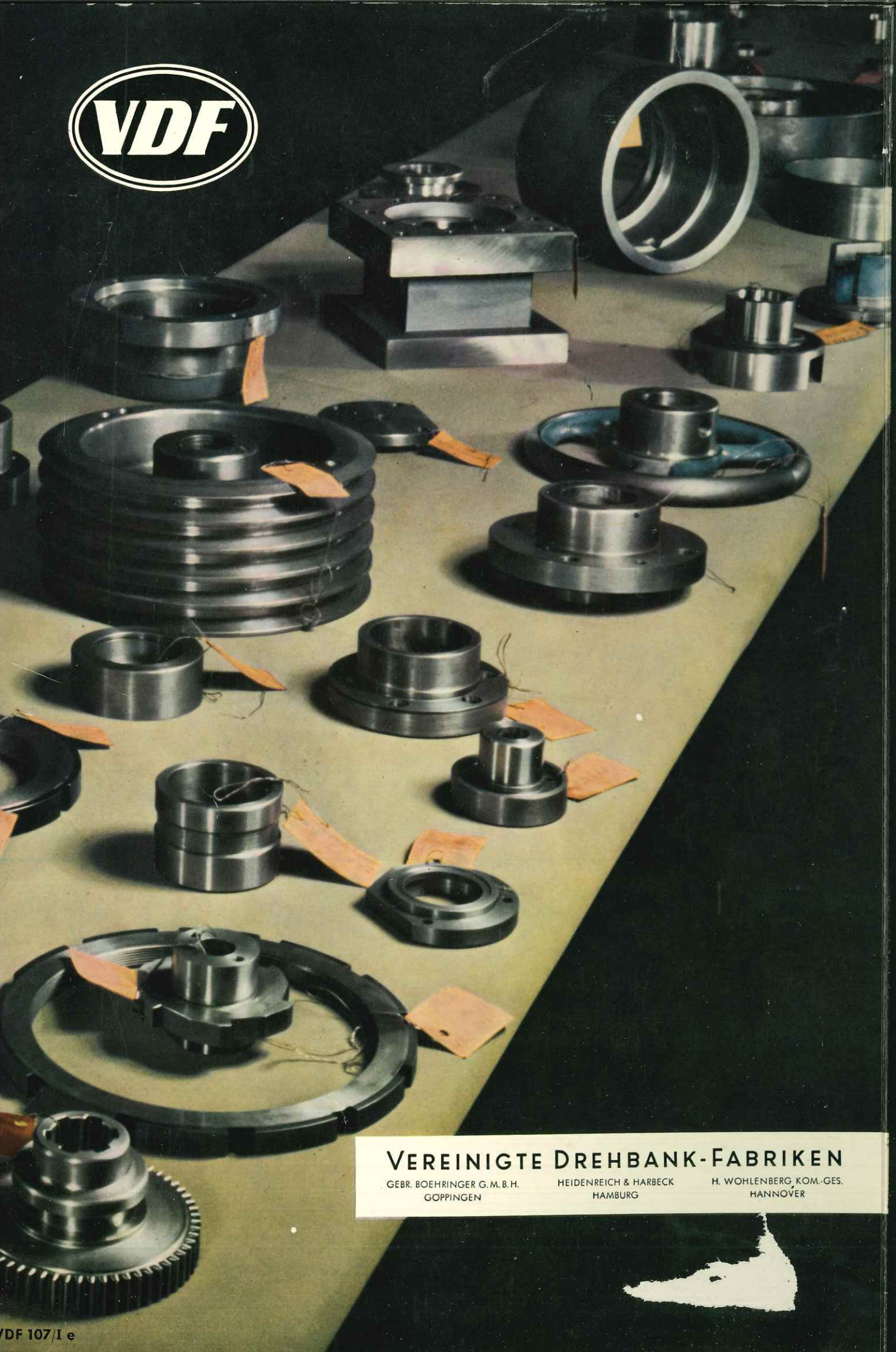
VDF
VEREINIGTE DREHBANK-FABRIKEN
GEBR. BOEHRINGER G. M. B. H.
GÖPPINGEN
HEIDENREICH & HARBECK
HAMBURG
H. WOHLENBERG, KOM.-GES.
HANNOVER

VDF 107/I e

82/117

Inset Sheet
to
VDF 107/I e

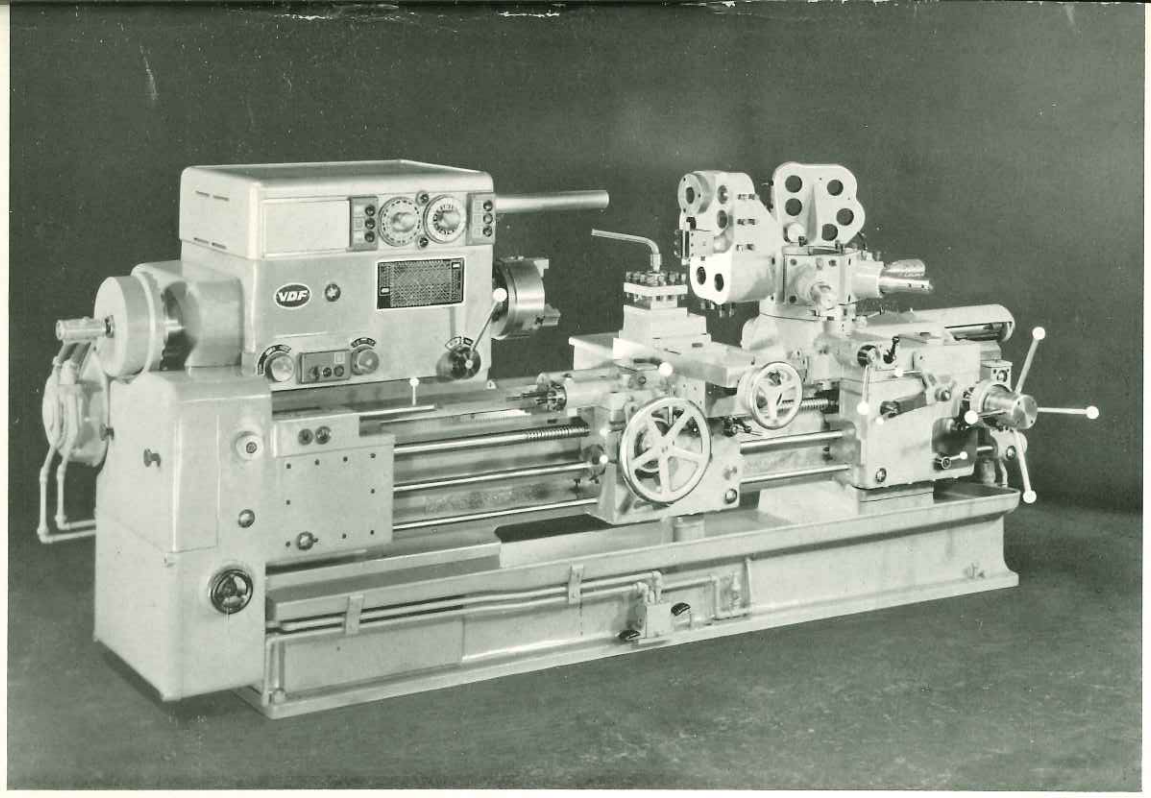

TURRET LATHES RS 50 – RS 63
WITH HEXAGON SADDLE TURRET

As with the models RS 80 – RS 100, the smaller models RS 50 – RS 63 are, on special request, supplied without the capstan slide to hexagon turret, i. e. the turret is mounted direct on the saddle. A travel of 680 mm of the hexagon turret is now available against a travel of 224 mm with the capstan slide. This, however, no longer permits the turret to be indexed automatically.

For a quicker travel of carriage and saddle, the machines are equipped, in addition to the rapid cross traverse of carriage, with rapid longitudinal traverse of carriage and saddle.

Thus, another design has been added to the range of the VDF-Turret Lathes offering the most economical utilisation in all those cases where a great longitudinal travel is required.

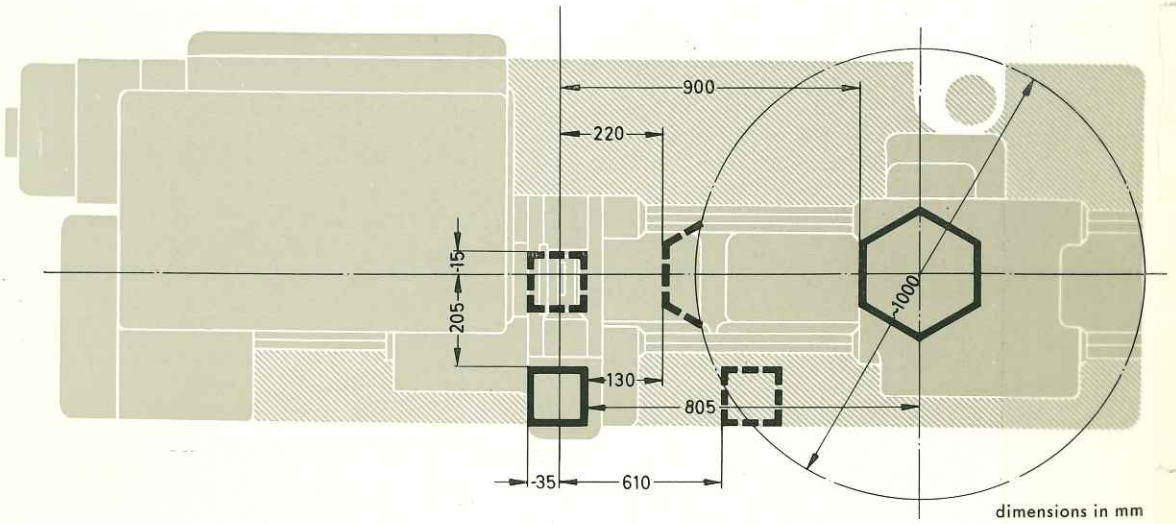

dimensions in mm

VEREINIGTE DREHBANK-FABRIKEN

GEBR. BOEHRINGER G.M.B.H.
GÖPPINGEN

HEIDENREICH & HARBECK
HAMBURG

H. WOHLENBERG KOM.-GES.
HANNOVER

82/117